Linear Actuator KA30 ICA

Data Sheet

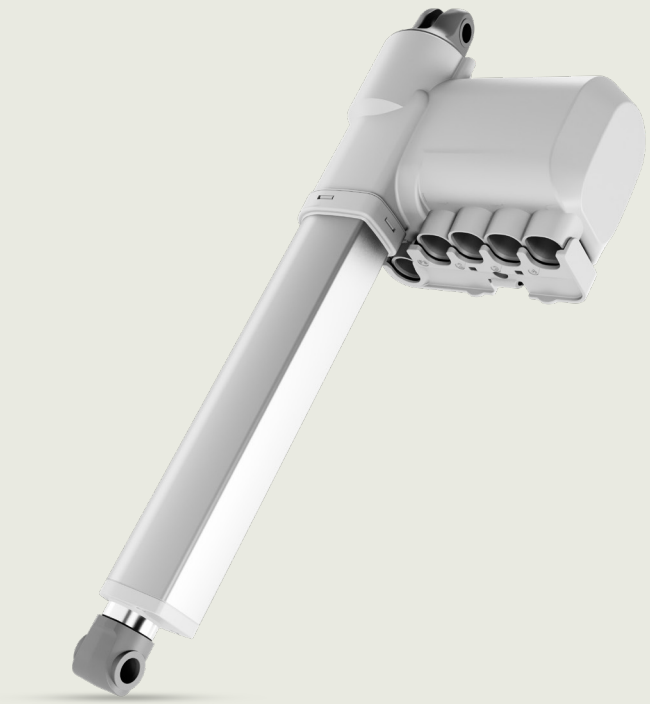

LINAK® WE IMPROVE YOUR LIFE

Contents

Introduction **3**
Features and options **3**
Usage **5**
Ordering example **6**
Approvals and certifications **7**
Technical specifications **8**
System overview **9**
Channel versions **10**
Dimensions **11**
Combination matrix **12**
Details on back fixture **13**
Back fixture overview 13
Details on piston rod eyes **14**
Piston rod overview 14
Packaging **14**
Safety factor **15**
Speed and current curves **16**
Contacts **18**

Introduction



KA30 ICA (Integrated Control Analogue) is a KA30 linear actuator featuring an integrated analogue control box. By combining the actuator and control unit into a single solution, the KA30 ICA simplifies installation and operation while reducing the number of components and improving overall cost efficiency.
The system operates with an external power supply, enabling low-voltage operation. The KA30 ICA system holds an IPX6 rating and is compatible with back-up battery BA15.

The KA30 ICA provides a reliable and economical solution for healthcare applications where simplicity and affordability are key. It is particularly well suited for equipment such as homecare beds and medical couches.

Key features:

- Integrated control box
- Reliable analogue functionality
- Easy and fast installation
- Modular power supply
- Cost-efficient design

Features and options

Load in push:	<1500 N, 1500 N, 3,000 N, 3,500 N, 4000 N, 6000 N, 8000 N
Load in pull:	4,000 N
Dynamic push and pull:	Actuators are designed for push or pull applications. If a combination is required, please contact your local LINAK salesperson.
Housing colour:	Light grey, RAL 7035
Protection class:	IPX4 and IPX6
Motor housing material:	PP-GF20
Flammability rating:	V0
Motor:	Small B version Standard C version Small with increased self-lock (H)
Stroke length:	<1500 N: 40-605 mm (in steps of 5 mm) 1500 N: 40-405 mm (in steps of 5 mm) 3000 N: 40-305 mm (in steps of 5 mm) 4000 N: 40-250 mm (in steps of 5 mm) 6000 N: 40-200 mm (in steps of 5 mm) 8000 N: 8,000 N - 5500 N: From 40-250 mm (in steps of 5 mm)
Built-in dimensions:	Function of stroke length (SL) and configuration SL + 170 mm SL + 183 mm with piston rod eye = H
Positioning options:	None
Noise level:	≤50 dB (A)

Nut:	Guided
Safety nut:	Standard
Spline:	Mechanical
Built-in electrical limit switch:	Signal switches (digital)
Built-in end stop switches:	Mechanical (for safety only)
Safety factor:	Up to 2.5
	2.0 (bed applications) 2.5 (medical applications)
Static bending moment:	No side load allowed
Weight:	>2 kg (dependent on specification)
Platform:	ICA (Integrated Control box Analogue)
Power supply:	External Switch Mode Power Supply (SMPS10)
Max. current:	Determined by external SMPS
	8 A per channel
Mains indicator:	No (dependent on external SMPS)
Actuator Interface:	3 or 4 channels:
	3-channel version (port 2 and 4) 4-channel version (port 2, 3, 4)
	6 pin Mini-Fit
	Note: Channel 1 is inside the ICA actuator
Power interface:	1 power port
	4 pin Mini-Fit
Hand control interface:	1 port
	10 pin modular plug
Battery interface:	Only compatible with BA15 with BA15 T-cable CABL00057 via power supply port.
Control concept:	FET (no relay noise)
Power management:	Yes
Standby power:	Approx. 0.5 W (230 V)
Cable lock:	Integrated.
Hand control compatibility:	Analogue common positive. 100 mA available.
Accessories:	Analogue common standard.
Operation:	KA30 ICA uses half-bridge technology. The following combinations are possible for instance to drive trend/anti-trend:
	1+3 1+4 2+3 2+4

Usage

Operation temperature:	+5 °C to +40 °C
Storage temperature:	-10 °C to +50 °C
Duty cycle:	10%, 2 minutes continuous use followed by 18 minutes not in use
Compatibility:	Compatible with SMPS10 (Class 2).
Relative humidity:	20% to 80% – non-condensing
Atmospheric pressure:	700 to 1060 hPa
Height above sea level:	Max. 3000 meters
Approvals:	IEC60601-1 ANSI/AAMI ES60601-1 CAN/CSA-22.2 No. 60601-1

Ordering example

KA

Actuator type: 30
30 = KA30

Spindle pitch: 030

030 = 3 mm	*Available for 6000N & 8000N & 4000N pull*
040 = 4 mm	*Available for 4000N & 6000N*
050 = 5 mm	*Available for 3500N*
060 = 6 mm	*Available for 3000N*
090 = 9 mm	*Available for <=1500N*

Stroke length: 300
xxx = mm

<1500N: From 40-605 mm in steps of 5 mm steps
1500N: From 40-405 mm in steps of 5 mm steps
2500N: From 40-305 mm in steps of 5 mm steps
3000N: From 40-305 mm in steps of 5 mm steps
4000N: From 40-250 mm in steps of 5 mm steps
6000N: From 40-200 mm in steps of 5 mm steps
8000N: 8000-5500N, From 40-250 mm in steps of 5 mm steps

Safety: 0A

00 = None	*Only possible for pull versions*
0A = Safety Nut	*Standard*
0C = Mech. Spline	*Available up to 6000N*
0D = Mech. Spline + Safety nut	*Available up to 6000N*

Feedback: 00
00 = None (F1)

Platform: 3
3 = ICA

Motor type: B
B = Small
C = Standard
H = Small with increased self-lock (Pull)

End stop: 1
1 = Signal switch, digital (E2)

IP degree: 6
4 = IPx4
6 = IPx6

Colour: +
+ = Light Grey (RAL7035) housing + outertube

Outer tube: 1
1 = Anodised

Quick Release: 0
0 = No Quick Release

Back fixture end: 3
1 = Plastic with slot Ø10.2
2 = Plastic with slot Ø12.2
3 = Metal with slot Ø10.2 (up to SF 5.0 in pull requires metal back fixture)

Back fixture rot.: 1
1 = Standard
2 = Turned 90°

Piston rod end: P

A = Plastic Ø10.2 (solid)
B = Plastic Ø12.2 (solid)
C = Steel Ø12.2 (solid)
D = Steel Ø14.05 (solid)
E = Steel Ø12.2 (with slot)
F = Steel Ø10.2 (with slot)
G = Short Plastic Ø10.2 (solid)
H = Plastic Ø10.5 (with slot) Only IPX4

Loading	Back fixture			Piston Rod End							
	1	2	3	A	B	C	D	E	F	G	H
≤1500N	Y	Y	Y	Y	Y	Y	Y	Y	Y	N	Y
1500N	Y	Y	Y	Y	Y	Y	Y	Y	Y	N	Y
3000N	Y	Y	Y	Y	Y	Y	Y	Y	Y	N	Y
4000N	Y	Y	Y	Y	Y	Y	Y	Y	Y	N	Y
6000N	Y	Y	Y	Y	Y	Y	Y	Y	Y	N	Y
8000N	Y	Y	Y	N	N	Y	Y	Y	Y	Y	N

Bushings: B
A = No Bushings
B = Plastic Bushings with Ø10.2 hole in Piston Rod — *Available for Option "Piston Rod End": C&E*

Brake: 1
0 = No Brake *(For Pull versions only)*
1 = Brake in push

Install. dimension: 594
xxx = xxx mm

Min BID=Stroke Length+170mm Available for other variants
Min BID=Stroke Length+183mm Available for other variants with "Piston Rod End" = H

Load range: 8

0 < 1500N
1 = 1500N
2 = 3500N
3 = 3000N
4 = 4000N
6 = 6000N
8 = 8000N

090+B		
090+B		
050+B		
060+B		
040+B	030+H (4000N Pull)	
030+B	040+C	
030+C (8kN - 5.5kN)		

Safety factor: 0
0 = 2.0 — Bed applications
2 = 2.5 — Medical applications

Channels: 8
8 = 3 channels
9 = 4 channels

Chosen item No.: 300303000A003B16+1031PB1594808

Approvals and certifications

For approval documentation, LINAK recommends specifying the product type instead of individual item numbers to ensure broader approval coverage and simplify future product changes.

Listed LINAK item for application approval: KA30 ICA

If this is not possible, we advise being as non-specific as possible when specifying LINAK products in your approval application:

Listed LINAK item for application approval: KA30******SS***S*S**********S**

" * " is not safety critical and we recommend including a non-specific signifier such as an asterisk.

" S " is safety critical and represents a listed critical component in the product and cannot be left out.

For more information, please refer to "Approvals and certifications" in LINAK Application Design Recommendations found under User Manual for any given product on LINAK.com

Information

- KA30 ICA comes with a pre-mounted cable lock, additional spares can be ordered as 1046w1237-X
- To avoid unintended release of the ICA cable lock, security screw no. 1046w1025-A (WN 1452 K35X12 TorX T15) must be ordered separately and installed after the cables have been connected. Recommended torque: 0.7 Nm

Technical specifications

Actuator	Motor type	Power Supply [V]	Spindle pitch [mm]	Max push load [N]	Self-locking load [N]	Typical speed at 0/max load [mm/s] +/-10%	Typical current at 0/max load [A]
KA30 ICA	Std. (C)	24	3	8000	8000	4.5/2.9	0.7/4.8
KA30 ICA	Std. (C)	33	3	8000	8000	6.2/4.6	0.8/4.8
KA30 ICA	Std. (C)	24	4	6000	6000	6.0/4.5	0.6/4.0
KA30 ICA	Std. (C)	33	4	6000	6000	8.2/6.2	0.6/4.0
KA30 ICA	Std. (C)	24	3	6000	6000	4.5/3.4	0.6/4.0
KA30 ICA	Std. (C)	33	3	6000	6000	6.2/4.7	0.6/4.0
KA30 ICA	Small (B)	24	3	6000	6000	4.4/2.8	0.5/3.5
KA30 ICA	Small (B)	33	3	6000	6000	6.1/3.9	0.5/3.5
KA30 ICA	Small (B)	24	4	4000	4000	5.8/4.4	0.5/3
KA30 ICA	Small (B)	33	4	4000	4000	8.1/6.1	0.5/3
KA30 ICA	Small (B)	24	6	3000	3000	8.7/6.9	0.5/2.5
KA30 ICA	Small (B)	33	6	3000	3000	12.0/9.5	0.5/2.5
KA30 ICA	Small (B)	24	9	1500	1500	13.0/11.0	0.8/2.8
KA30 ICA	Small (B)	33	9	1500	1500	18.0/15.5	0.8/2.8
KA30 ICA	Small (H)	24	3	4000	4000	4.4/3.3	0.5/3.5
KA30 ICA	Small (H)	33	3	4000	4000	6.1/4.6	0.5/3.5

See section on speed/load, current/load curves below.

System overview

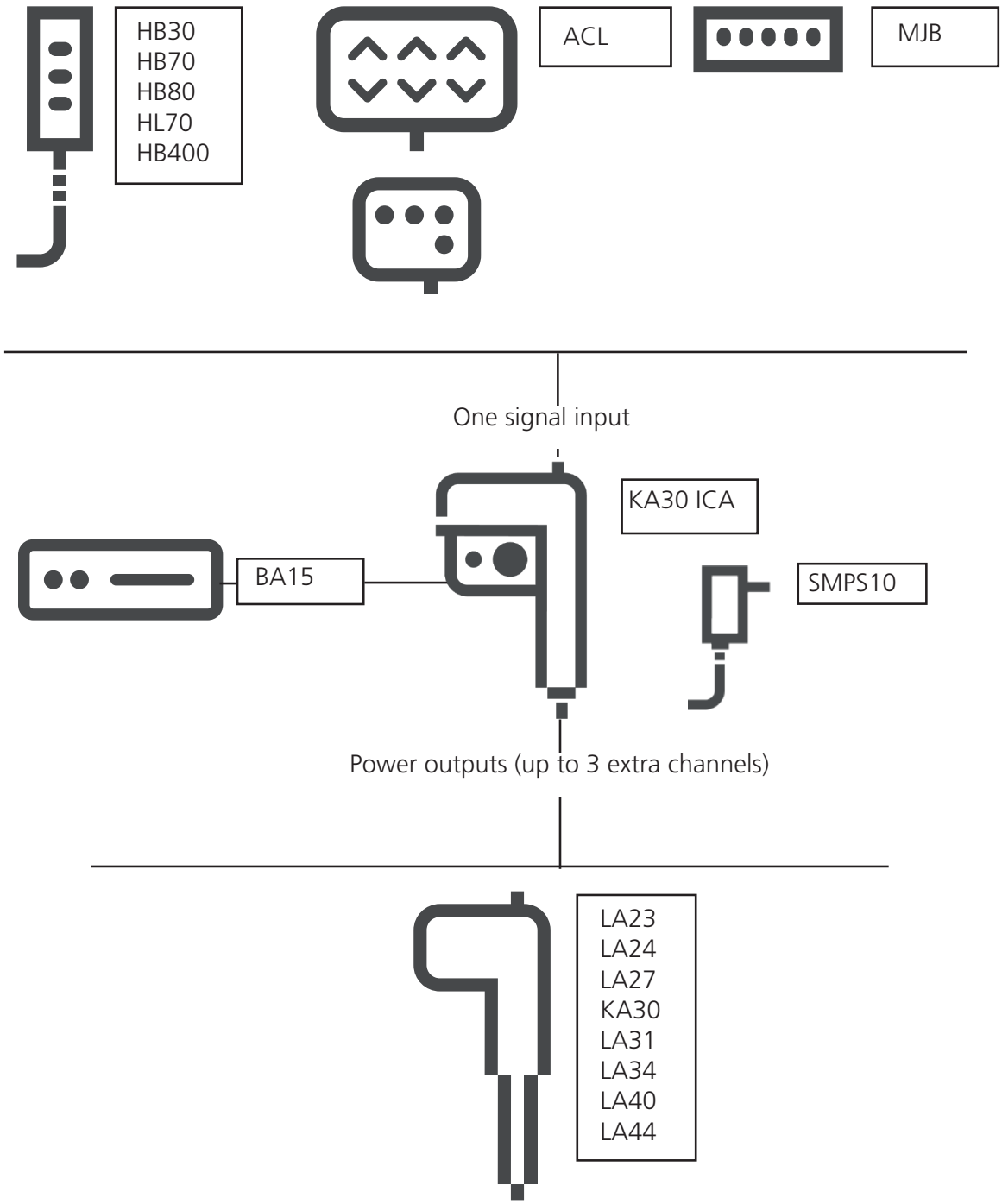

Channel versions



4-channel version



3-channel version

Note that port 3 is blocked.

Dimensions

All dimensions are in mm.

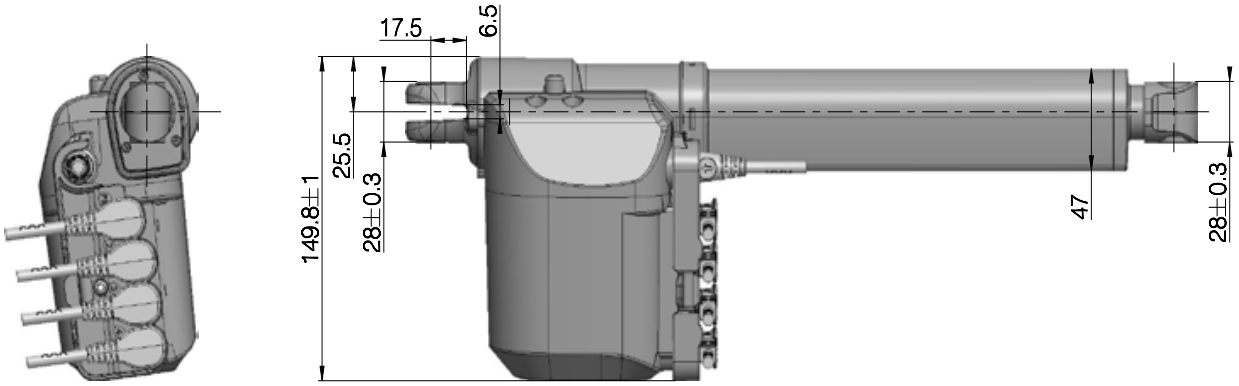

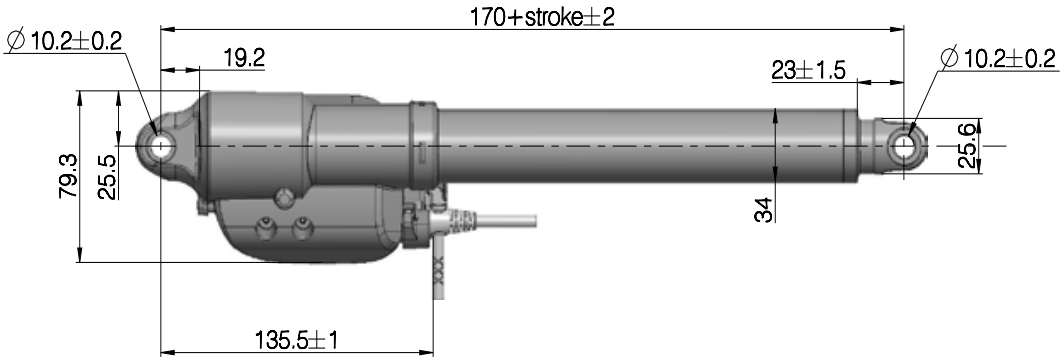

Drawing no.: 1046W4001

Combination matrix

Force (N)	Motor type	Pitch (mm)	Quick Release	Mech. Spline	Ratchet spline	Safety nut	Max. stroke (mm)	Manual lowering	Pull
≤1,500 N	Small B	9	No	Yes	No	Yes	605	No	No
1,500 N	Small B	9	No	Yes	No	Yes	405	No	No
3,000 N	Small B	6	No	Yes	No	Yes	305	No	No
4,000 N	Small B	4	No	Yes	No	Yes	250	No	No
4,000 N	Small H	3	No	No	No	Yes	250	No	Yes
6,000 N	Small B	3	No	Yes	No	Yes	200	No	No
6,000 N	Standard C	3, 4	No	Yes	No	Yes	200	No	No
8,000 N	Standard C	3	No	No	No	Yes	200	No	No

Details on back fixture

Load	Back fixture (for further details see ordering example)		
	End 1	End 2	End 3
≤1,500 N	OK	OK	OK
1,500 N	OK	OK	OK
3,000 N	OK	OK	OK
4,000 N	OK	OK	OK
6,000 N	OK	OK	OK
8,000 N	OK	OK	OK

Back fixture overview

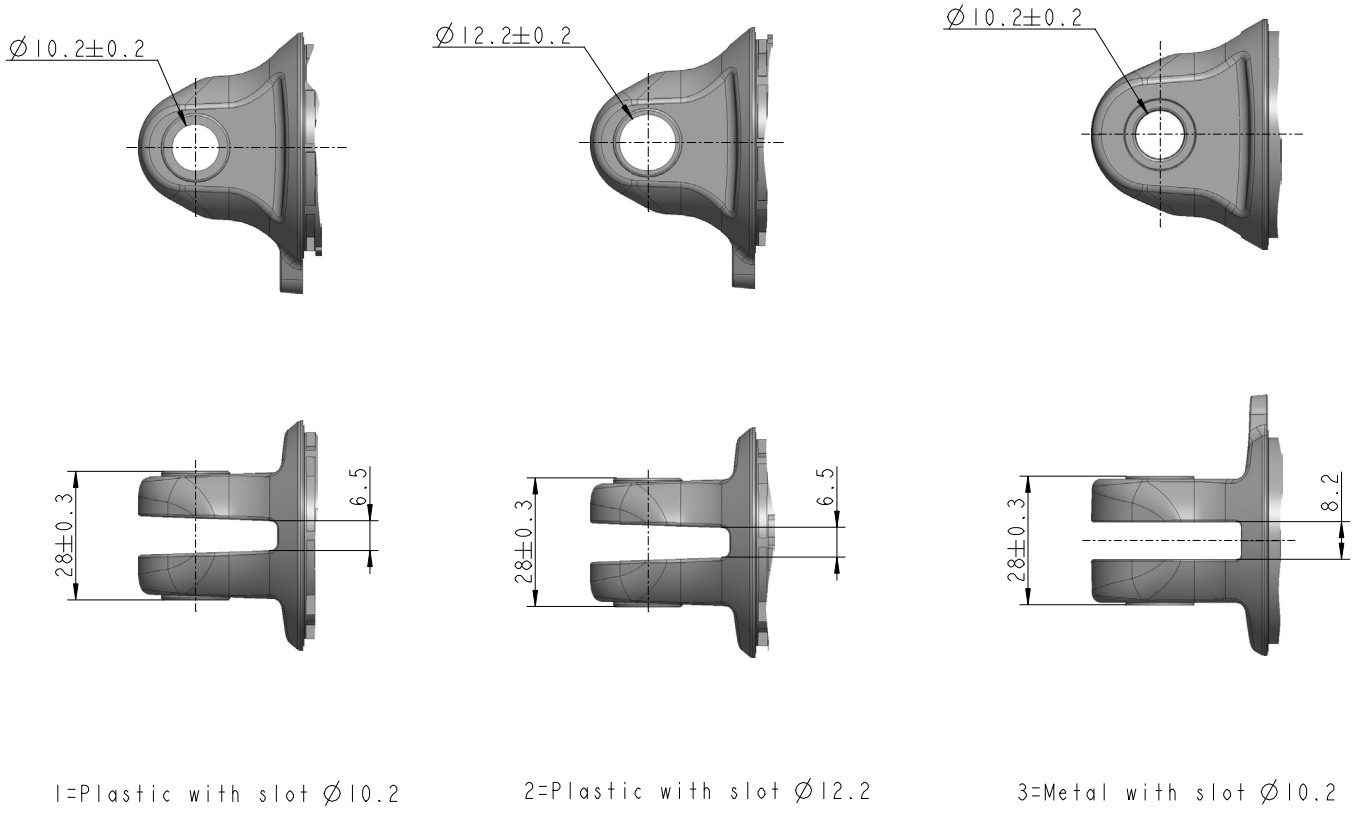

1=Plastic with slot Ø10.2

2=Plastic with slot Ø12.2

3=Metal with slot Ø10.2

Details on piston rod eyes

	Piston Rod End							
	A	B	C	D	E	F	G	H
≤1,500 N	OK	OK	OK	OK	OK	OK		OK
1,500 N	OK	OK	OK	OK	OK	OK		OK
3,000 N	OK	OK	OK	OK	OK	OK		OK
4,000 N	OK	OK	OK	OK	OK	OK		OK
6,000 N	OK	OK	OK	OK	OK	OK		OK
8,000 N			OK	OK	OK	OK	OK	

Piston rod overview

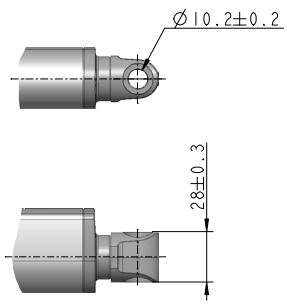

A=Plastic Ø10.2

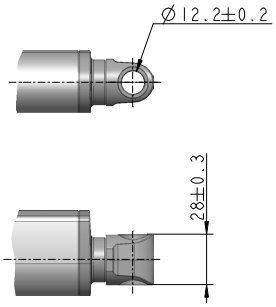

B=Plastic Ø12.2

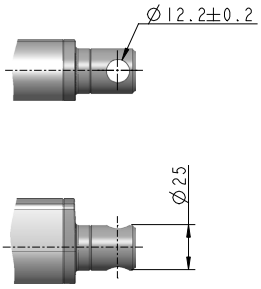

C=Metal with Ø12.2

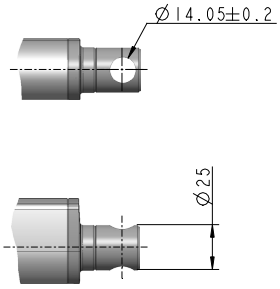

D=Metal with Ø14.05

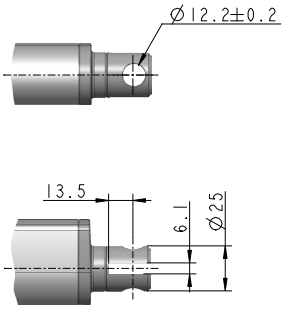

E=Metal with slot Ø12.2

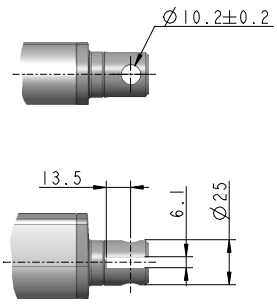

F=Metal with slot Ø10.2

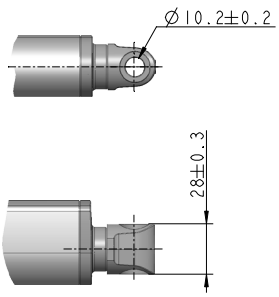

G=Short Plastic Ø10.2

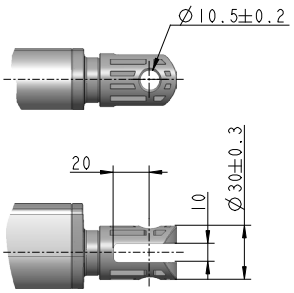

H=Plastic with slot Ø10.5

Packaging

Type	Built-in Dimension (BID)	Quantity per box
KA30 ICA	BID ≤ 450 mm	120
KA30 ICA	600 ≥ BID > 450 mm	72
KA30 ICA	BID > 600 mm	72

Safety factor

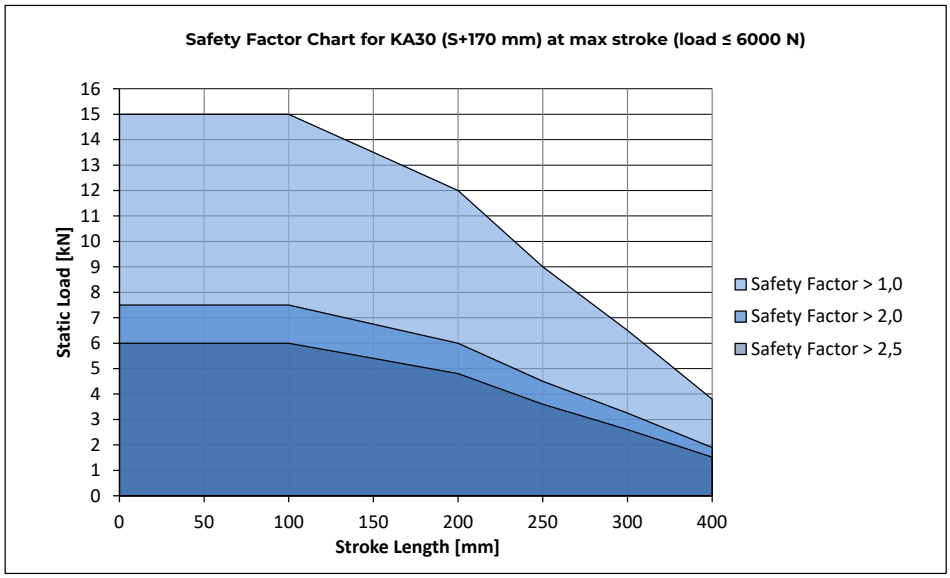

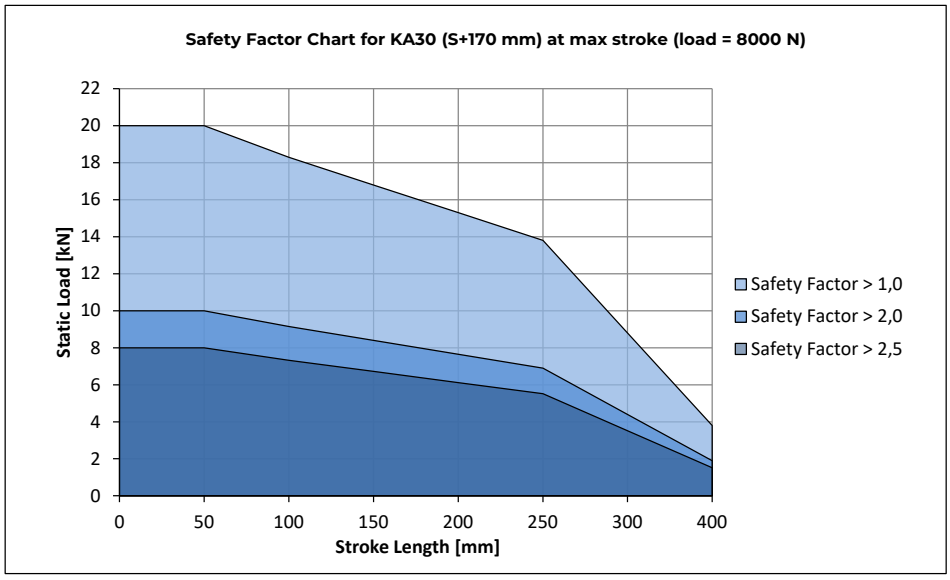

Speed and current curves

KA30 ICA standard, motor type C (push)



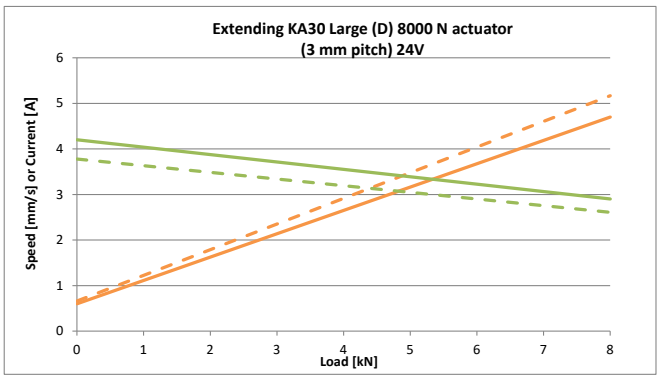

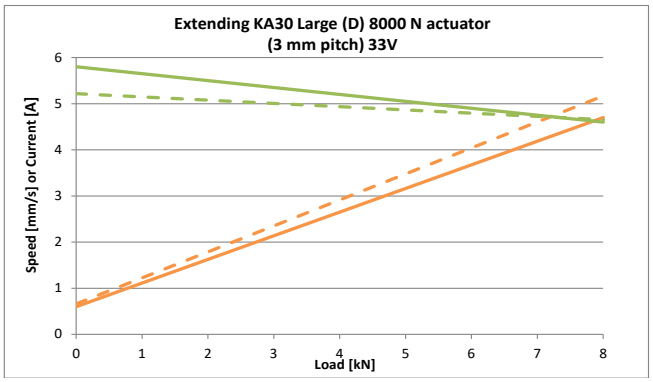

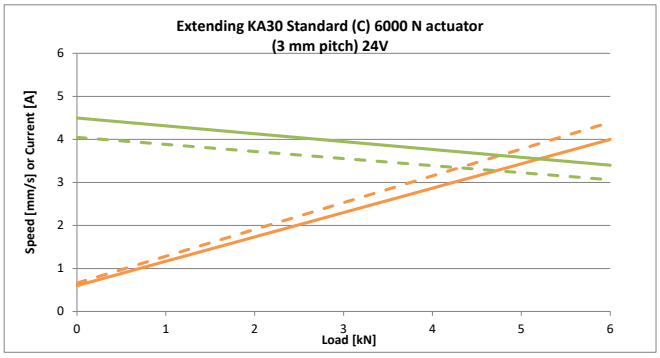

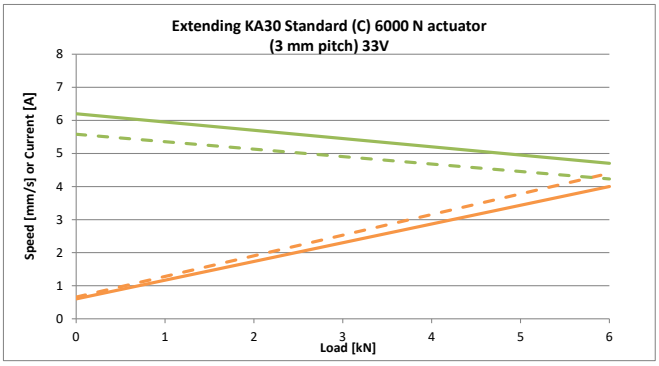

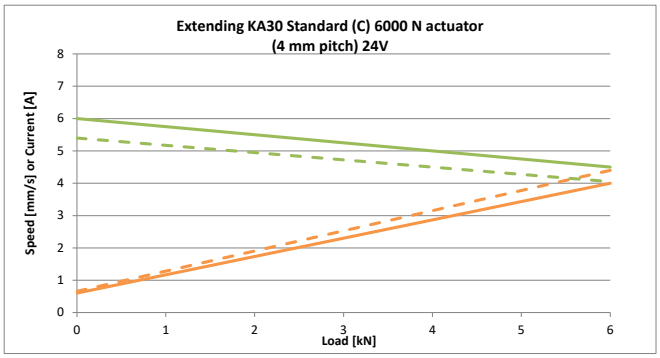

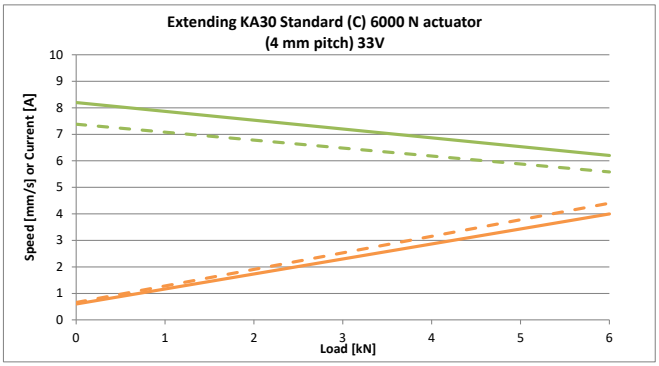

KA30 ICA small, motor type B (push)



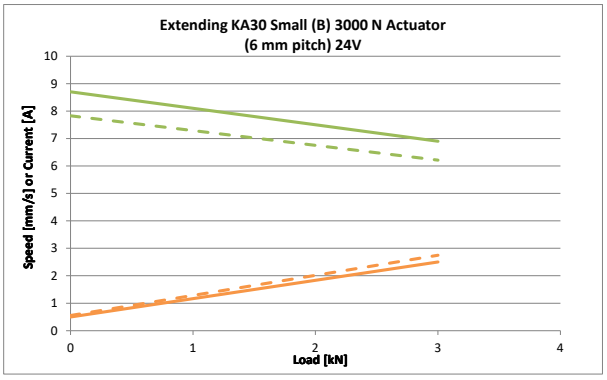

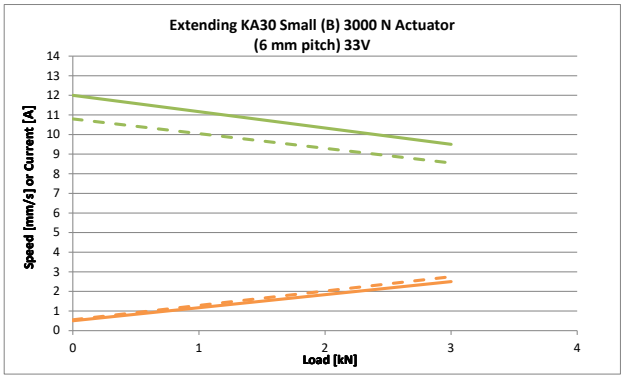

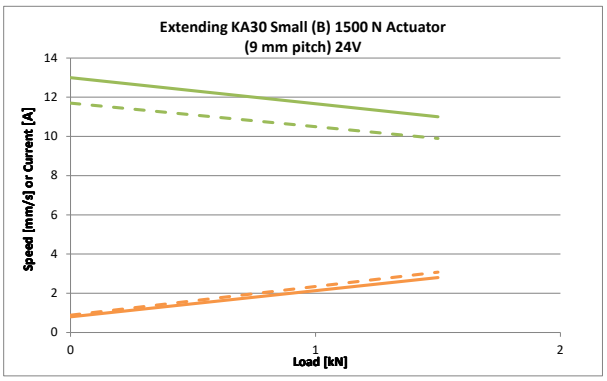

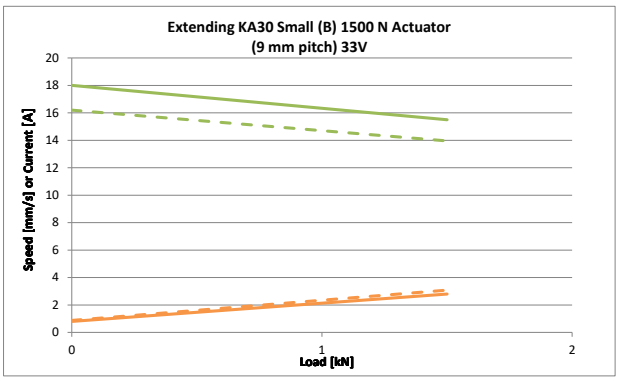

KA30 ICA small, motor type H (pull), with increased self-lock at 4,000 N



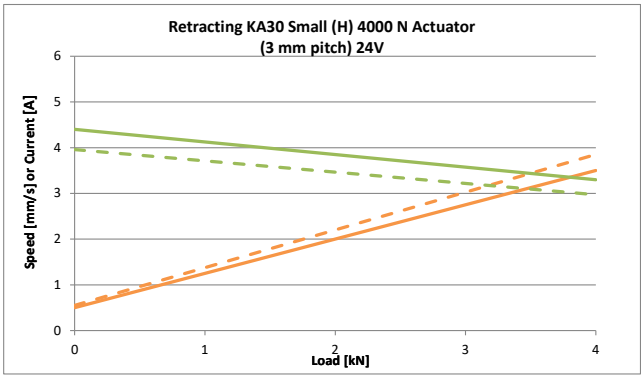

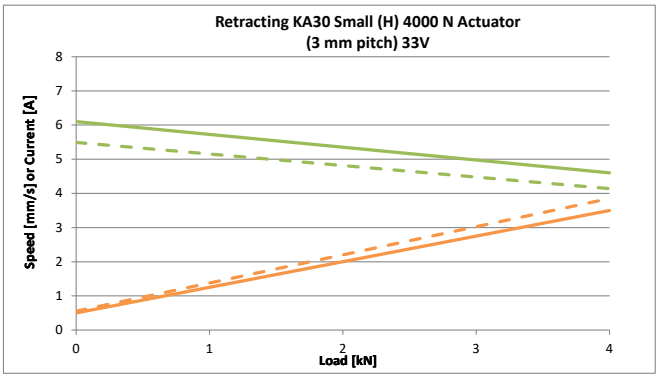

Contacts

FACTORIES

Denmark - Headquarters
LINAK A/S
Phone: +45 73 15 15 15
Fax: +45 74 45 80 48
Fax (Sales): +45 73 15 16 13
Web: www.linak.com

China
LINAK (Shenzhen) Actuator Systems, Ltd.
Phone: +86 755 8610 6656
Phone: +86 755 8610 6990
Web: www.linak.cn

Slovakia
LINAK Slovakia s.r.o.
Phone: +421 51 7563 444
Web: www.linak.sk

Thailand
LINAK APAC Ltd.
Phone: +66 33 265 400
Web: www.linak.com

USA
LINAK U.S. Inc.
Americas Headquarters
Phone: +1 502 253 5595
Fax: +1 502 253 5596
Web: www.linak-us.com
www.linak-latinamerica.com

SUBSIDIARIES

Australia
LINAK Australia Pty. Ltd
Phone: +61 3 8796 9777
Fax: +61 3 8796 9778
E-mail: sales@linak.com.au
Web: www.linak.com.au

Austria
LINAK Zweigniederlassung - Österreich (Wien)
Phone: +43 (1) 890 7446
Fax: +43 (1) 890 744615
E-mail: info@linak.de
Web: www.linak.at - www.linak.hu

Belgium
LINAK Actuator-Systems NV/SA
(Belgium & Luxembourg)
Phone: +32 (0)9 230 01 09
E-mail: beinfo@linak.be
Web: www.linak.be - www.fr.linak.be

Brazil
LINAK Do Brasil Comércio De Atuadores Ltda.
Phone: +55 (11) 2832 7070
Fax: +55 (11) 2832 7060
E-mail: info@linak.com.br
Web: www.linak.com.br

Canada
LINAK Canada Inc.
Phone: +1 502 253 5595
Fax: +1 416 255 7720
E-mail: info@linak.ca
Web: www.linak-us.com

Czech Republic
LINAK C&S s.r.o.
Phone: +42 058 174 1814
Fax: +42 058 170 2452
E-mail: info@linak.cz
Web: www.linak.cz - www.linak.sk

Denmark - International
LINAK International
Phone: +45 73 15 15 15
E-mail: info@linak.com
Web: www.linak.com

Denmark - Sales
LINAK Danmark A/S
Phone: +45 86 80 36 11
Fax: +45 86 82 90 51
E-mail: linak@linak-silkeborg.dk
Web: www.linak.dk

Finland
LINAK OY
Phone: +358 10 841 8700
E-mail: linak@linak.fi
Web: www.linak.fi

France
LINAK France E.U.R.L
Phone: +33 (0) 2 41 36 34 34
Fax: +33 (0) 2 41 36 35 00
E-mail: linak@linak.fr
Web: www.linak.fr

Germany
LINAK GmbH
Phone: +49 6043 9655 0
Fax: +49 6043 9655 60
E-mail: info@linak.de
Web: www.linak.de

India
LINAK A/S India Liaison Office
Phone: +91 120 4531797
Fax: +91 120 4786428
E-mail: info@linak.in
Web: www.linak.in

Ireland
LINAK UK Limited (Ireland)
Phone: +44 (0)121 544 2211
Fax: +44 (0)121 544 2552
+44 (0)796 855 1606 (UK Mobile)
+35 387 634 6554 (Rep.of Ireland Mobile)
E-mail: sales@linak.co.uk
Web: www.linak.co.uk

Italy
LINAK ITALIA S.r.l.
Phone: +39 02 48 46 33 66
Fax: +39 02 48 46 82 52
E-mail: info@linak.it
Web: www.linak.it

Japan
LINAK K.K.
Phone: 81-45-533-0802
Fax: 81-45-533-0803
E-mail: linak@linak.jp
Web: www.linak.jp

Malaysia
LINAK Actuators Sdn. Bhd.
Phone: +60 4 210 6500
Fax: +60 4 226 8901
E-mail: info@linak-asia.com
Web: www.linak.my

Netherlands
LINAK Actuator-Systems B.V.
Phone: +31 76 5 42 44 40 /
+31 76 200 11 10
E-mail: info@linak.nl
Web: www.linak.nl

New Zealand
LINAK New Zealand Ltd
Phone: +64 9580 2071
Fax: +64 9580 2072
E-mail: nzsales@linak.com.au
Web: www.linak.com.au

Norway
LINAK Norge AS
Phone: +47 32 82 90 90
E-mail: info@linak.no
Web: www.linak.no

Poland
LINAK Polska
LINAK Danmark A/S (Spólka Akcyjna)
Phone: +48 22 295 09 70 /
+48 22 295 09 71
E-mail: info@linak.pl
Web: www.linak.pl

Republic of Korea
LINAK Korea Ltd.
Phone: +82 2 6231 1515
Fax: +82 2 6231 1516
E-mail: info@linak.kr
Web: www.linak.kr

Slovakia
LINAK Slovakia S.R.O.
Phone: +421 51 7563 444
Web: www.linak.sk

Spain
LINAK Actuadores, S.L.u
Phone: +34 93 588 27 77
Fax: +34 93 588 27 85
E-mail: esma@linak.es
Web: www.linak.es

Sweden
LINAK Scandinavia AB
Phone: +46 8 732 20 00
Fax: +46 8 732 20 50
E-mail: info@linak.se
Web: www.linak.se

Switzerland
LINAK AG
Phone: +41 43 388 31 88
E-mail: info@linak.ch
Web: www.linak.ch - www.fr.linak.ch
www.it.linak.ch

Taiwan
LINAK (Shenzhen) Actuator systems Ltd.
Taiwan Representative office
Phone: +886 2 272 90068
Fax: +886 2 272 90096
E-mail: sales@linak.com.tw
Web: www.linak.com.tw

Turkey
LINAK İth. İhr. San. ve Tic. A.Ş.
Phone: + 90 312 4726338
Fax: + 90 312 4726635
E-mail: info@linak.com.tr
Web: www.linak.com.tr

United Kingdom
LINAK UK Limited
Phone: +44 (0)121 544 2211
Fax: +44 (0)121 544 2552
E-mail: sales@linak.co.uk
Web: www.linak.co.uk

DISTRIBUTORS

Argentina
Novotec Argentina SRL
Phone: 011-4303-8989 / 8900
Fax: 011-4032-0184
E-mail: info@novotecargentina.com
Web: www.novotecargentina.com

Colombia
MEM Ltda
Phone: +[57] (1) 334-7666
Fax: +[57] (1) 282-1684
E-mail: servicioalcliente@memltda.com.co
Web: www.mem.net.co

India
Mechatronics Control Equipments India Pvt Ltd
Phone: +91-44-28558484, 85
E-mail: bala@mechatronicscontrol.com
Web: www.mechatronicscontrol.com

Indonesia
PT. Himalaya Everest Jaya
Phone: +6 221 544 8956 /+6 221 544 8965
Fax: +6 221 619 1925
Fax (Sales): +6 221 619 4658
E-mail: hejplastic-div@centrin.net.id
Web: www.hej.co.id

Israel
NetivTech LTD
Phone: +972 55-2266-535
Fax: +972 2-9900-560
Email: info@NetivTech.com
Web: www.netivtech.com

Singapore
Servo Dynamics Pte Ltd
Phone: +65 6844 0288
Fax: +65 6844 0070
E-mail: servodynamics@servo.com.sg

South Africa
Industrial Specialised Applications CC
Phone: +27 011 466 0346
E-mail: gartht@isagroup.co.za
Web: www.isaza.co.za

United Arab Emirates
Mechatronics
Phone: +971 4 267 4311
Fax: +971 4 267 4312
E-mail: mechtron@emirates.net.ae

Terms of use

LINAK® takes great care to provide accurate and up-to-date information about its products. However, it is the responsibility of the user to determine the suitability of LINAK products for any specific application. Due to ongoing product development, LINAK products are subject to continuous modifications and changes. LINAK reserves the right to make such modifications, updates, and changes without prior notice. For this reason, LINAK cannot guarantee the accuracy or current status of printed information about its products.

LINAK uses its best efforts to fulfil orders. However, for the reasons mentioned above, LINAK cannot guarantee availability of any particular product at any given time. LINAK reserves the right to discontinue the sale of any product displayed on its website or listed in its catalogues or in other written material created and produced by LINAK, LINAK subsidiaries, or LINAK affiliates.
All sales are subject to the applicable terms and conditions of sale and delivery available on LINAK websites. LINAK and the LINAK logotype are registered trademarks of LINAK A/S. All rights reserved.

Copyright© LINAK • 2026-09 • LIT-62-02-136 B

LINAK®
WE IMPROVE YOUR LIFE