HOMELINE®
IMPROVING COMFORT

KA30 Residential
Data Sheet



LINAK®
WE IMPROVE YOUR LIFE



The KA30 Residential actuator is a powerful linear actuator designed for adjustable comfort furniture and other applications where high force and reliable movement are essential. Offering lifting forces of up to 6000 N, the actuator enables smooth adjustment of furniture functions while maintaining a low noise level and a comfortable user experience.

With its compact design and flexible configuration options, the KA30 Residential is easy to integrate into an single-motor adjustable bed. The actuator supports modern furniture designs by combining high performance, durability, and a discreet appearance, making it an ideal choice for solutions where strength and reliability are required.

Features/Compatibility/Usage

Features

The KA30 Residential is based on the Linear Actuator KA30 for healthcare applications known for its high performance and reliability.

The KA30 Residential version has been specifically adapted for furniture applications.

- Spindle pitch: 4 mm or 6 mm
- In combination with CBD6S or CBD6DC:

Parameter	With CBD6S (300 W or 200 W)	
Spindle pitch	4 mm	6 mm
Max. load	6000 N	3000 N

- Motor cable connection with 6-pole mini-fit plug, like DESKLINE® products
- Colour: Available with motor housing in black (RAL 9005) or light grey (RAL 7035)



For complete feature details, please refer to the original MEDLINE/CARELINE KA30 Data Sheet.

Compatibility

- CBD6S Residential and CBD6DC HOMELINE with software SW03002021 ver. 1.13 or later
- DESKLINE cables

Usage

- Single actuator for bed applications
- Duty cycle: 10% ≈ max. 2 minutes continuous use at full load, followed by 18 minutes pause
- For indoor use in dry locations

Parameter	Operation	Storage and transportation
Temperature	5 to 40 °C	-10 to +50 °C
Relative humidity	20% to 80% - non-condensing	20% to 80% - non-condensing
Atmospheric pressure	800 to 1060 hPa	700 to 1060 hPa
Altitude	Max. 3000 m	N/A

For system compliance, please refer to the CBD6DC HOMELINE and the CBD6S Residential Data Sheets.

Ordering

The KA30 Residential products are only available as special articles. Please contact your local LINAK.

Technical data

Performance curves

The following data is measured with CBD6S (300 W) and single-actuator drive over 100 mm in outward direction.

KA30 Residential (4 mm spindle pitch)

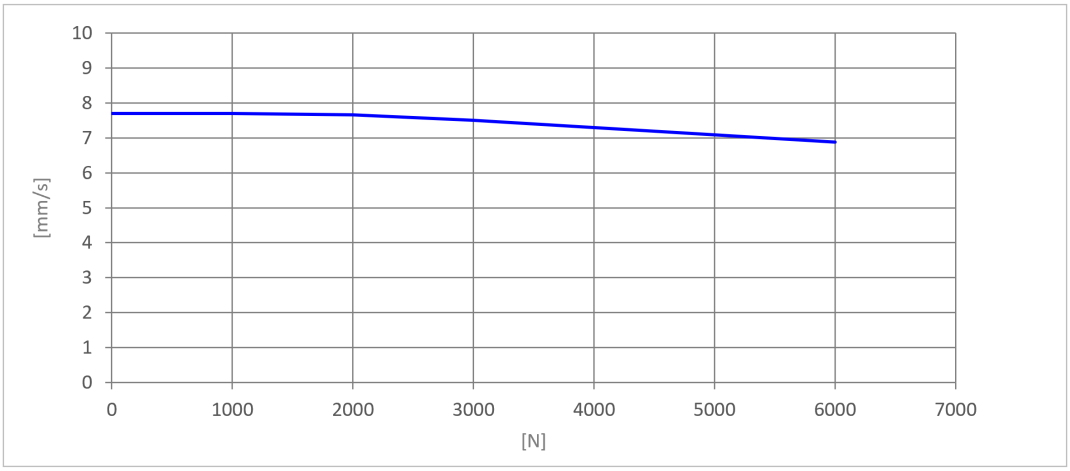

Figure 1 KA30 (4 mm) average speed

KA30 Residential (6 mm spindle pitch)

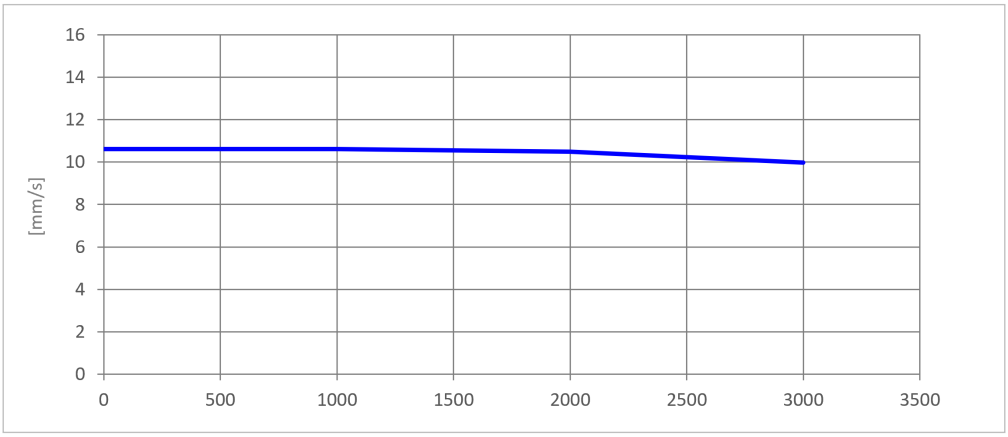

Figure 2 KA30 (6 mm) average speed

Dimension drawings

All dimensions are in mm.

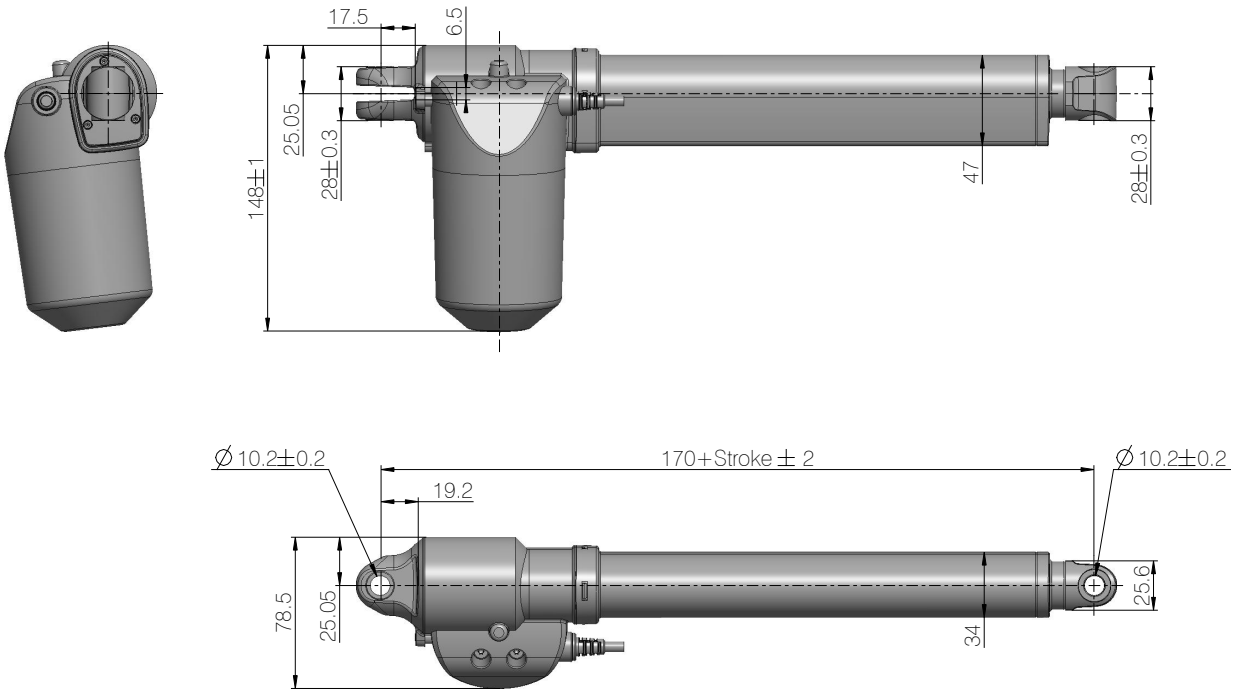

Drawing no.: 1046W4001

Figure 3 KA30 Residential with standard back fixture

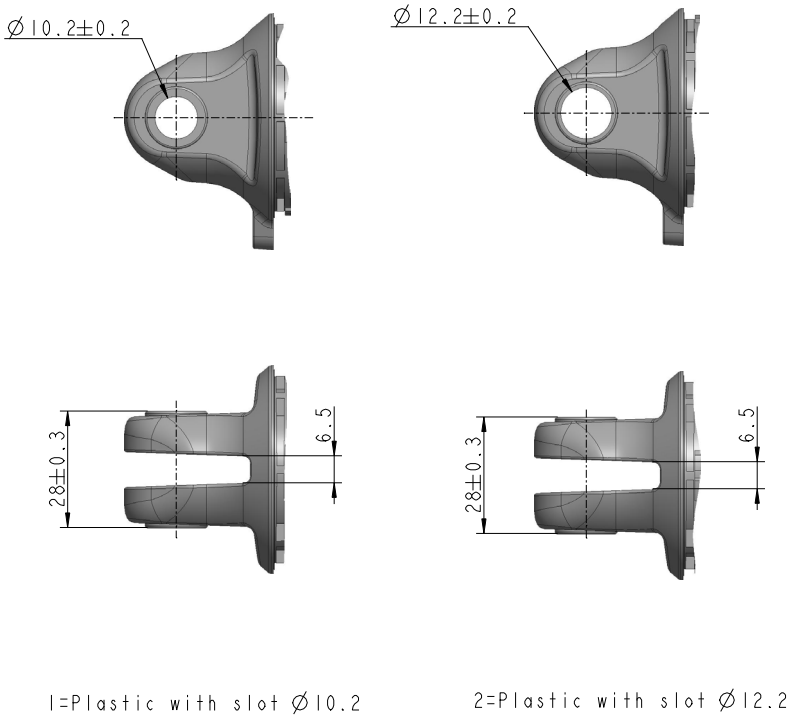

Figure 4 KA30 Residential back fixture options

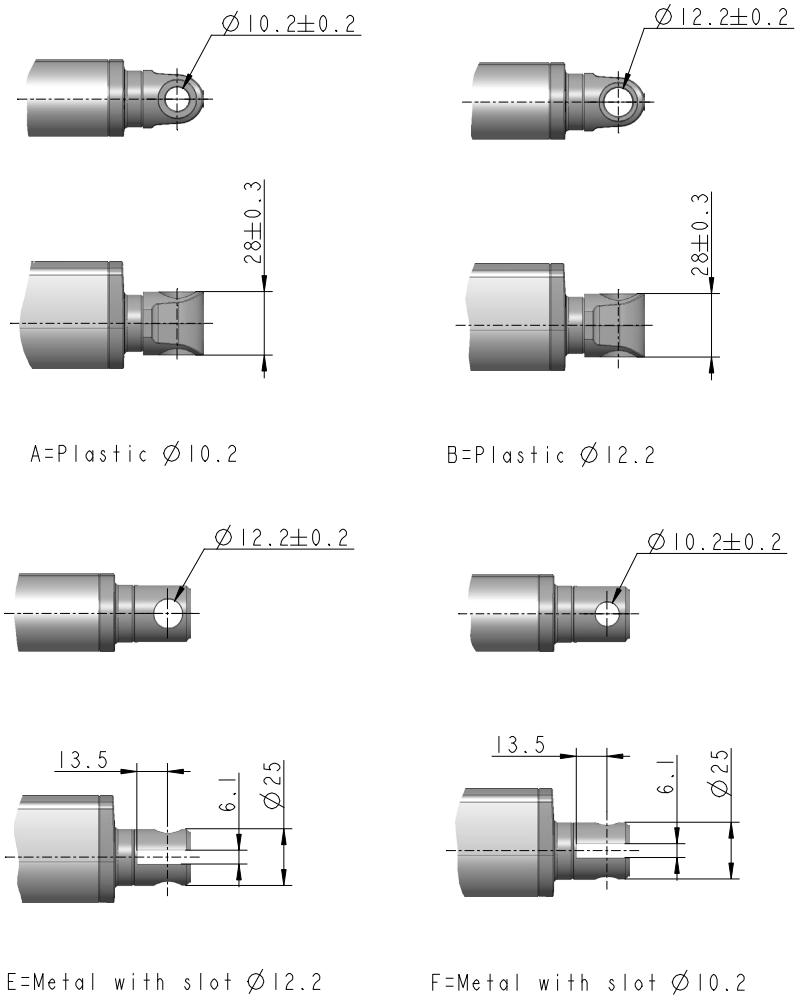

Figure 5 KA30 Residential Piston rod eyes options

Contacts

FACTORIES

Denmark - Headquarters
LINAK A/S
Phone: +45 73 15 15 15
Fax: +45 74 45 80 48
Fax (Sales): +45 73 15 16 13
Web: www.linak.com

China
LINAK (Shenzhen) Actuator Systems, Ltd.
Phone: +86 755 8610 6656
Phone: +86 755 8610 6990
Web: www.linak.cn

Slovakia
LINAK Slovakia s.r.o.
Phone: +421 51 7563 444
Web: www.linak.sk

Thailand
LINAK APAC Ltd.
Phone: +66 33 265 400
Web: www.linak.com

USA
LINAK U.S. Inc.
Americas Headquarters
Phone: +1 502 253 5595
Fax: +1 502 253 5596
Web: www.linak-us.com
www.linak-latinamerica.com

SUBSIDIARIES

Australia
LINAK Australia Pty. Ltd
Phone: +61 3 8796 9777
Fax: +61 3 8796 9778
E-mail: sales@linak.com.au
Web: www.linak.com.au

Austria
LINAK Zweigniederlassung - Österreich (Wien)
Phone: +43 (1) 890 7446
Fax: +43 (1) 890 744615
E-mail: info@linak.de
Web: www.linak.at - www.linak.hu

Belgium
LINAK Actuator-Systems NV/SA
(Belgium & Luxembourg)
Phone: +32 (0)9 230 01 09
E-mail: beinfo@linak.be
Web: www.linak.be - www.fr.linak.be

Brazil
LINAK Do Brasil Comércio De Atuadores Ltda.
Phone: +55 (11) 2832 7070
Fax: +55 (11) 2832 7060
E-mail: info@linak.com.br
Web: www.linak.com.br

Canada
LINAK Canada Inc.
Phone: +1 502 253 5595
Fax: +1 416 255 7720
E-mail: info@linak.ca
Web: www.linak-us.com

Czech Republic
LINAK C&S s.r.o.
Phone: +42 058 174 1814
Fax: +42 058 170 2452
E-mail: info@linak.cz
Web: www.linak.cz - www.linak.sk

Denmark - International
LINAK International
Phone: +45 73 15 15 15
E-mail: info@linak.com
Web: www.linak.com

Denmark - Sales
LINAK Danmark A/S
Phone: +45 86 80 36 11
Fax: +45 86 82 90 51
E-mail: linak@linak-silkeborg.dk
Web: www.linak.dk

Finland
LINAK OY
Phone: +358 10 841 8700
E-mail: linak@linak.fi
Web: www.linak.fi

France
LINAK France E.U.R.L
Phone: +33 (0) 2 41 36 34 34
Fax: +33 (0) 2 41 36 35 00
E-mail: linak@linak.fr
Web: www.linak.fr

Germany
LINAK GmbH
Phone: +49 6043 9655 0
Fax: +49 6043 9655 60
E-mail: info@linak.de
Web: www.linak.de

India
LINAK A/S India Liaison Office
Phone: +91 120 4531797
Fax: +91 120 4786428
E-mail: info@linak.in
Web: www.linak.in

Ireland
LINAK UK Limited (Ireland)
Phone: +44 (0)121 544 2211
Fax: +44 (0)121 544 2552
+44 (0)796 855 1606 (UK Mobile)
+35 387 634 6554 (Rep.of Ireland Mobile)
E-mail: sales@linak.co.uk
Web: www.linak.co.uk

Italy
LINAK ITALIA S.r.l.
Phone: +39 02 48 46 33 66
Fax: +39 02 48 46 82 52
E-mail: info@linak.it
Web: www.linak.it

Japan
LINAK K.K.
Phone: 81-45-533-0802
Fax: 81-45-533-0803
E-mail: linak@linak.jp
Web: www.linak.jp

Malaysia
LINAK Actuators Sdn. Bhd.
Phone: +60 4 210 6500
Fax: +60 4 226 8901
E-mail: info@linak-asia.com
Web: www.linak.my

Netherlands
LINAK Actuator-Systems B.V.
Phone: +31 76 5 42 44 40 /
+31 76 200 11 10
E-mail: info@linak.nl
Web: www.linak.nl

New Zealand
LINAK New Zealand Ltd
Phone: +64 9580 2071
Fax: +64 9580 2072
E-mail: nzsales@linak.com.au
Web: www.linak.com.au

Norway
LINAK Norge AS
Phone: +47 32 82 90 90
E-mail: info@linak.no
Web: www.linak.no

Poland
LINAK Polska
LINAK Danmark A/S (Spólka Akcyjna)
Phone: +48 22 295 09 70 /
+48 22 295 09 71
E-mail: info@linak.pl
Web: www.linak.pl

Republic of Korea
LINAK Korea Ltd.
Phone: +82 2 6231 1515
Fax: +82 2 6231 1516
E-mail: info@linak.kr
Web: www.linak.kr

Slovakia
LINAK Slovakia S.R.O.
Phone: +421 51 7563 444
Web: www.linak.sk

Spain
LINAK Actuadores, S.L.u
Phone: +34 93 588 27 77
Fax: +34 93 588 27 85
E-mail: esma@linak.es
Web: www.linak.es

Sweden
LINAK Scandinavia AB
Phone: +46 8 732 20 00
Fax: +46 8 732 20 50
E-mail: info@linak.se
Web: www.linak.se

Switzerland
LINAK AG
Phone: +41 43 388 31 88
E-mail: info@linak.ch
Web: www.linak.ch - www.fr.linak.ch
www.it.linak.ch

Taiwan
LINAK (Shenzhen) Actuator systems Ltd.
Taiwan Representative office
Phone: +886 2 272 90068
Fax: +886 2 272 90096
E-mail: sales@linak.com.tw
Web: www.linak.com.tw

Turkey
LINAK İth. İhr. San. ve Tic. A.Ş.
Phone: + 90 312 4726338
Fax: + 90 312 4726635
E-mail: info@linak.com.tr
Web: www.linak.com.tr

United Kingdom
LINAK UK Limited
Phone: +44 (0)121 544 2211
Fax: +44 (0)121 544 2552
E-mail: sales@linak.co.uk
Web: www.linak.co.uk

DISTRIBUTORS

Argentina
Novotec Argentina SRL
Phone: 011-4303-8989 / 8900
Fax: 011-4032-0184
E-mail: info@novotecargentina.com
Web: www.novotecargentina.com

Colombia
MEM Ltda
Phone: +[57] (1) 334-7666
Fax: +[57] (1) 282-1684
E-mail: servicioalcliente@memltda.com.co
Web: www.mem.net.co

India
Mechatronics Control Equipments India Pvt Ltd
Phone: +91-44-28558484, 85
E-mail: bala@mechatronicscontrol.com
Web: www.mechatronicscontrol.com

Indonesia
PT. Himalaya Everest Jaya
Phone: +6 221 544 8956 /+6 221 544 8965
Fax: +6 221 619 1925
Fax (Sales): +6 221 619 4658
E-mail: hejplastic-div@centrin.net.id
Web: www.hej.co.id

Israel
NetivTech LTD
Phone: +972 55-2266-535
Fax: +972 2-9900-560
Email: info@NetivTech.com
Web: www.netivtech.com

Singapore
Servo Dynamics Pte Ltd
Phone: +65 6844 0288
Fax: +65 6844 0070
E-mail: servodynamics@servo.com.sg

South Africa
Industrial Specialised Applications CC
Phone: +27 011 466 0346
E-mail: gartht@isagroup.co.za
Web: www.isaza.co.za

United Arab Emirates
Mechatronics
Phone: +971 4 267 4311
Fax: +971 4 267 4312
E-mail: mechtron@emirates.net.ae

Terms of use

LINAK® takes great care to provide accurate and up-to-date information about its products. However, it is the responsibility of the user to determine the suitability of LINAK products for any specific application. Due to ongoing product development, LINAK products are subject to continuous modifications and changes. LINAK reserves the right to make such modifications, updates, and changes without prior notice. For this reason, LINAK cannot guarantee the accuracy or current status of printed information about its products.

LINAK uses its best efforts to fulfil orders. However, for the reasons mentioned above, LINAK cannot guarantee availability of any particular product at any given time. LINAK reserves the right to discontinue the sale of any product displayed on its website or listed in its catalogues or in other written material created and produced by LINAK, LINAK subsidiaries, or LINAK affiliates.
All sales are subject to the applicable terms and conditions of sale and delivery available on LINAK websites.
LINAK and the LINAK logotype are registered trademarks of LINAK A/S. All rights reserved.

Copyright© LINAK • 2026-09 • LIT-22-02-038 A

LINAK®
WE IMPROVE YOUR LIFE