DESKLINE®
IMPROVING ERGONOMICS

DL EXPERIENCE™ HD
User Manual

LINAK®
WE IMPROVE YOUR LIFE

LINAK.COM/DESKLINE

Contents

Preface ... 3
Important safety information ... 4
Informations importantes en matière de sécurité ... 5
The DESKLINE® system ... 6
Intended use ... 6
Warranty ... 6
Products ... 7
Safety instructions ... 9
Important safety instructions ... 9
General ... 9
Before installation, re-installation, cleaning, or troubleshooting ... 10
Before start-up ... 10
During operation ... 10
Repairs ... 11
Consignes importantes de sécurité ... 12
Declaration of Conformity ... 13
Manufacturer's declaration ... 15
Installation ... 16
Mounting the column ... 16
LINAK frame ... 16
Other frames ... 17
Miscellaneous columns ... 18
PIEZO™ columns ... 18
Columns with bracket ... 18
Mounting the feet ... 19
On-top or reccessed ... 20
Mounting the CBD6S ... 21
Installation tips ... 22
Bench systems ... 22
DESKLINE bench systems ... 22
Connection ... 23
Connecting the system ... 23
Initialising the system ... 23
Operation ... 23
Maintenance ... 24
Cleaning the desk panel ... 24
Repair and disposal ... 25
Servicing double-insulated products ... 25
Accessories and spare parts ... 25
Contacts ... 26

Preface

Dear User,

We are delighted that you have chosen a LINAK® product.

LINAK systems are high-tech products based on many years of experience in the manufacture and development of actuators, lifting columns, desk frames, electric control boxes, controls, batteries, accessories and chargers.

This User Manual does not address the end user. It is intended as a source of information for the equipment or system manufacturer only, and it will tell you how to install, use and maintain your LINAK electronics. The manufacturer of the end product has the responsibility to provide a User Manual, where relevant safety information from this manual is passed on to the end user.

We are convinced that your LINAK product/system will give you many years of problem-free operation.

Before our products leave the factory, they undergo both function and quality testing. Should you, nevertheless, experience problems with your product/system, you are always welcome to contact your supplier.

LINAK subsidiaries and some distributors situated all over the world have authorised service centres, which are always ready to help you. Locate your local contact information on the back page.

LINAK provides a warranty on all products, see Warranty.

This warranty, however, is subject to correct use in accordance with the specifications, maintenance being done correctly, and any repairs being carried out at a service centre, which is authorised to repair LINAK products.

Changes in installation and use of LINAK systems can affect their operation and durability. The products may only be opened by authorised personnel.

This User Manual has been written based on the present technical knowledge. LINAK reserves the right to carry out technical modifications and keeps the associated information updated.

LINAK A/S

Important safety information

Safe use of the system is possible only when this document is read completely and the instructions contained are strictly observed.

Failure to comply with instructions marked with the "NOTICE" symbol may result in serious damage to the system or one of its components.

Read all instructions before using this product.

Important safety information on LINAK® products can be found under the following heading(s):

DANGER

Failure to comply with these instructions will result in severe personal injury.

WARNING

Failure to comply with these instructions may result in severe personal injury.

CAUTION

Failure to comply with these instructions can result in minor personal injury.

NOTICE

Failure to comply with these instructions can result in property damage.

READ AND SAVE THESE INSTRUCTIONS

Informations importantes en matière de sécurité

Une utilisation sûre du système n'est possible que lorsque ce document est lu dans son intégralité et que les instructions qu'il contient sont strictement respectées.

Le non-respect des instructions marquées du symbole "AVIS" peut entraîner de graves dommages au système ou à l'un de ses composants.

Lisez toutes les instructions avant d'utiliser ce produit.

Des informations de sécurité importantes sur les produits LINAK® sont disponibles dans la ou les rubriques suivantes :

DANGER

Le non-respect de ces instructions entraînera des blessures graves.

AVERTISSEMENT

Le non-respect de ces instructions peut entraîner des blessures graves.

ATTENTION

Le non-respect de ces instructions peut entraîner des blessures corporelles légères.

AVIS

Le non-respect de ces instructions peut entraîner des dommages matériels.

LIRE ET CONSERVER CES INSTRUCTIONS

The DESKLINE® system

This system is a DESKLINE system developed for heavy-duty lifting applications, such as trading desks, control room consoles, technical and dispatch workstations, and similar industrial setups

Intended use

This product is intended for indoor use.

Bench systems are intended for use in areas where children or people with cognitive disabilities are not anticipated to be present or, if present, closely supervised.

Parameter	Operation	Storage and transportation
Temperature	10 to 40 °C	-10 to +50 °C
Relative humidity	20% to 80% - non-condensing	20% to 80% - non-condensing
Atmospheric pressure	800 to 1060 hPa	700 to 1060 hPa
Altitude	Max. 2000 m	N/A

Do not use outdoors or in wet areas.

Do not use it in environments that have to be cleaned with aggressive detergents.

Warranty

The warranty terms for DESKLINE products are described in this warranty paper:
https://cdn.linak.com/-/media/files/warranty/warranty-paper-deskline-eng.pdf

Products

DESKLIFT™ columns

DL5 EXPERIENCE™ HD	DL10 EXPERIENCE™ HD	DL20 EXPERIENCE™ HD	
• 2-part column	• 2-part column	• 2-part column	
DL6 EXPERIENCE™ HD	**DL11 EXPERIENCE™ HD**	**DL19 EXPERIENCE™ HD**	**DL21 EXPERIENCE™ HD**
• 3-part column	• 3-part column	• 3-part column	• 3-part column

EXPERIENCE™ columns are compatible with DESKLINE® control boxes with SW03002024 (ver. 1.09 or later) or SW03002026 (ver 1.20 or later).

Control Box CBD6S

200 W	300 W
• 230 V AC, 50 Hz • 120 V AC, 60 Hz	• 100-240 V AC, 50-60 Hz (universal)

Controls

With up/down drive	• DPA • DPB • **DPH**	• DP1K • DPF1K • DPG1K • DPI1K
With multiple references	• **DPF2K**	• **DPF3K**
With display	• DPF1D	
With memory	• DPF1M	• DPG1M
With display and memory	• DP1CS • **DPT**	• DPF1C • DPG1C • DPI1C
With display, memory, and multiple references	• **DPF4T**	

Safety instructions

Important safety instructions

General

DANGER

Plugged-in products

Risk of electric shock

- Always unplug this product from the electrical outlet before assembling, disassembling, cleaning, or servicing.
- Only use the product indoors in dry locations.

WARNING

General precautions

Risk of burns, fire, electric shock, or injury to persons

- Unplug from outlet before putting on or taking off parts.
- It is important that everyone who is to connect, install, or use the systems has the necessary information and access to this User Manual. Follow the instructions for mounting - there is a risk of injury if these instructions are not followed.
- Close supervision is necessary when this product is used by or near children, invalids, or disabled persons.
- If there is visible damage to the product, do not install or use the product.
- Ensure that the cable and the plug are not damaged, and keep the cable away from heated surfaces.
- Use this product only for its intended use as described in this User Manual.
  Do not use attachments not recommended by the manufacturer.
- Never insert any object into any opening.
- During construction of applications in which the system is to be fitted, there must be no risk of personal injury, for example squeezing of fingers or arms.
- Do not open the product.

CAUTION

Objects above and below the application

Risk of personal injury and material damage

- Ensure free space above and below the application to avoid entrapment and blocking the movement in either direction.

Before installation, re-installation, cleaning, or troubleshooting

- Stop the system.
- Unplug the power cable.
- Relieve the system of any loads, which may be released during the work.
- Review the assembly instructions to confirm that the appropriate critical components and accessories are being used with this product.

Before start-up

- Make sure that the system has been installed as instructed in this User Manual.
- Make sure that the voltage of the system matches the mains voltage before connecting the system to the mains.
- Always use the supplied power cable.

During operation

- If the system makes unusual noise or smells, unplug the mains cable immediately.
- Observe the maximum load/self-lock (per column)

Column	Max. load (N)	Self-lock (N)
EXPERIENCE™ HD	1200	1200

- Duty cycle: 10% ≈ max. 1 minute continuous use, followed by 9 minutes pause
- Take care that the cables are not damaged.

CAUTION

Load on the application

Risk of injury to persons and of malfunction

- Do not overload the frame.
- Place heavy load centrally on the application.
- Do not use the frame for lifting persons.
- Do not stand on the application while it is driving up or down.

NOTICE

Duty cycle

Risk of malfunction

- Do not exceed the duty cycle.

Repairs

WARNING

Opening the product

Risk of injury to persons

- Do not open the DESKLINE® product.

In order to avoid the risk of malfunction, all DESKLINE® repairs must only be carried out by authorised LINAK workshops or repairers, as special tools must be used and special gaskets must be fitted. Lifting units under warranty must also be returned to authorised LINAK workshops.

WARNING

- This appliance can be used by children aged from 8 years, and by persons with reduced physical, sensory or mental capabilities, or lack of experience and knowledge, if they have been given supervision or instruction concerning use of the appliance in a safe way and understand the hazards involved.
- Children shall not play with the appliance. Cleaning and user maintenance shall not be made by children without supervision.

Only for US and Canadian markets

- Persons who do not have the necessary experience or knowledge of the product/products must not use the product/products. Besides, persons with reduced physical, sensory, or mental abilities must not use the product/products, unless they are under surveillance or they have been thoroughly instructed in the use of the apparatus by a person who is responsible for the safety of these persons.
- Moreover, children must be under surveillance to ensure that they do not play with the product.
- It is the operator's responsibility to ensure that there is free space for the application to move without risk for the operator or bystanders before operating the application.

Consignes importantes de sécurité

AVERTISSEMENT

- Cet appareil peut-être utilisé par des enfants âgés de 8 ans et plus, ainsi que les personnes dont les capacités physiques, sensorielles ou mentales sont réduites ou ayant un manque d´expérience et de connaissance si elles ont bénéficié d´une surveillance ou d´instructions concernant l´utilisation de l´appareil en toute sécurité et compris les risques encourus.
- Les enfants ne doivent pas jouer avec l´appareil. Le nettoyage et l´entretien ne doivent pas être rèalisés par des enfants sans surveillance

Seulement pour les marchés américains et canadiens

- Les personnes qui n´ont pas l´expérience ou les connaissances nécessaires sur le ou les produit(s) ne doivent pas le ou les utiliser. Par ailleurs, les personnes ayant des capacités physiques, sensorielles ou mentales réduites ne doivent pas utiliser le ou les produit(s), sauf si elles sont sous surveillance ou ont suivi une formation approfondie de l´utilisation de l´appareil par l´individu responsable de la securité de ces personnes.
- De plus, les enfants doivent-être sous surveillance afin de s´assurer qu´ils ne jouent pas avec le produit.
- Il est de la responsabilité de l'opérateur de s'assurer qu'il y a de l'espace libre pour que l'application puisse se déplacer sans risque pour l'opérateur ou les passants avant d'utiliser l'application.

ATTENTION

Charge sur l'application

Risque de dommages corporels et de dysfonctionnement

- Ne pas surcharger l'actionneur.
- Placer la charge lourde au centre de l'application.
- Ne pas utiliser le cadre pour soulever des personnes.
- Ne vous tenez pas debout sur l'application pendant qu'il monte ou descend.

Declaration of Conformity

WE IMPROVE YOUR LIFE

EU DECLARATION OF CONFORMITY

LINAK A/S
Smedevænget 8
DK - 6430 Nordborg

hereby declares under our sole responsibility that LINAK DESKLINE® Actuator System, model: **CBD6S**, for use in elevation tables, composed of:

Control Box(s) CBD6Sa000b0A-c09,
(Where -a: can be P, C or H, -b: can be 2, 3 or 4 and -c: can be 0 or 7)

together with an optional combination of:

Linear Actuator(s)
LA31: 31abcH-defff50S, (Where -a: can be 1, 3, 6 or 7; - b can be from 1 to 8, or A or B; - c can be from 0 to 4; - d can be 0 or 1; - e can be 0 or 1; - fff can be max 500)

Built in actuator(s)
DB5, DB6, DB14: DBabbcdefghhhiii, (Where: - a: can be 5, 6 or 14,; - b: can be 0, 1, 3, 4 or 9; - c: can be 0, 1, B, L or S; - d: can be 0, 1 or 2; - e: can be 0, A, B or X; - f: can be 0, or A; - g: can be from 0, M, S, E, T or V; - hhh: can be from 000 to 675; - iii: can be from 000 to 630);

Lifting Column(s)
Standard columns: DLabcdefghhhiii, (Where: - a: can be 1A, 4S, 5, 6, from 8 to 12, from 14 to 21; - b: can be 0,1, 2, 3, 4 or 5; - c: can be 0, A, B, D, W or x; - d: can be 0, 1, L, R or X; - e: can be A, B, D or X; - f: can be 0, N, M, P or x; - g: can be 0, E, T or V; - hhh: can be from 600 to 1100; - iii: can be from 000 to 785);
DL12: DL12abcdefggghhh (where - a can be A or B; - b can be 0 or E; -c can be 0, L, R or X; - d can be A, B, D or X; - e can be 0 or M; - f can be 0 or E; - ggg can be max 1100; - hhh can be max 785)
DL7: DL73a0b00470645 (where – a can be 0 or R; - b can be A, B, C or D)
DL2: DL2abCcdefffggg (where - a can be 3, 6 or 7; - b can be from 0 to 3; - c can be A or B; - d can be 0, F or G; -e can be from 0 to 7; -fff can be from 300 to 500; -ggg can be from 445 to 655)
DF2L: DF2La0000bcP0dddeee (Where -a: can be 05, 06, 18, 19; -b can be 0, V, H; -c can be A, B, D; -ddd can be from 500 to 665; eee can be from 475 to 602)
BASELIFT: BASE1000A0F100100
LC1: LC1aaaxxxbbbb0cd0eee0Gf4+g (where -a can be 060 or 100; -xxx can be 200 to 665; -bbbb can be numbers or letters; -c can be 0, H or M; -d can be A, B or C; -eee can be from 275 to 560; -f can be 0, 1 or 2; and -g can be A or E.
EXPERIENCE™ columns: DLaabccdeffffghijklmnopppqqq, (Where: - aa: can be 05, 06,10,11,18,19, 20, 21; - b: can be F; - cc: can be 30; - d: can be 0; - e: can be 0; - ffff: can be any number or letter; - g: can be 0 or X; - h: can be 0 or X; - i: can be P; -j: can be 0; -k: can be 0 or 1; -l: can be 0 or Z; -m: can be 0; -n: can be 0; -o: can be 0 or E; -pppp: can be from 0278 to 1100; and -qqq: can be from 200 to 785.
DL14T: DL14T00X0E500630, where X can be B or D.

Desk Panel(s) DPA, DPB, DPH, DPF1K, DPF1M, DPF2K, DPF3K, DPF1C, DPF1D, DPF1U, DPF1W, DPF4T, DPG1K, DPG1M, DPG1B, DPG1C, DPT, DP1V01, DP1CS, DP1K, DP1U, DP2K, DP3K, DPN, DPWA, DPI-K, DPI-C

Accessories BLE2LIN (BLE2LIN002, BLE2LIN003), DESK SENSOR 1, USB2LIN, DCConnector, CHUSB, BA001, BP10BL

Complies with EMC Directive: **2014/30/EU** (*OJ L 96, 29.3.2014, p. 79–106*) according to following standards:
EN 61000-6-2:2005/AC:2005, EN 61000-6-3:2007/A1:2011/AC:2012
(and subsequent EN 61000-3-2:2014 and EN 61000-3-3:2013)

Complies with Low Voltage Directive **2014/35/EU** (*OJ L 96, 29.3.2014, p. 357–374*) according to the standard:
EN 60335-1:2012+AC:2014+A11:2014+A13:2017+A1:2019+A14:2019+A2:2019+A15:2021+A16:2023
EN 62233:2008 + AC:2008

Complies with Directive **2011/65/EU** of the European Parliament and of the Council of 8 June 2011 on the restriction of the use of certain hazardous substances in electrical and electronic equipment (*OJ L 174, 1.7.2011, p. 88–110*) and Directive **2015/863** (*OJ L 137, 4.6.2015, p. 10–12*) (amending Annex II to Directive 2011/65/EU) according to the standard:
EN IEC 63000:2018

Additionally, BA001 complies with Battery Regulation (EU) 2023/1542 Article 6.
And the applicable Desk Panels and Accessories complies with the Radio Equipment Directive **2014/53/EU** (*OJ L 153, 22.5.2014, p. 62–106*) according to the standards listed in the RED DoC for the individual radio products.

Where this product or system includes or is supplied with batteries, those batteries comply with the requirements of Regulation (EU) 2023/1542.

Other specification:
The system does also comply with the standard: EN 61000-6-2:2019 and EN 13849-1:2015 SRP/CS Cat. B, PL = b and SRESW PL = b, Note 1: Exempted CBD6S with SW03003007 printed on the label.

Nordborg, 2026-02-17

Signature present in original document.

Signed: Dragan Macura (Regulatory Compliance Manager)

Manufacturer's declaration

DECLARATION OF INCORPORATION OF PARTLY COMPLETED MACHINERY

LINAK A/S
Smedevænget 8
DK - 6430 Nordborg

Herewith declares that LINAK DESKLINE® products as characterized by the following models and types:

Control Boxes: CBD6Sa000b0A-c09 (Where -a: can be P, C or H, -b: can be 2, 3 or 4 and -c: can be 0 or 7)
Linear Actuators: LA31
Built in actuator(s): DB5, DB6, DB14,
Lifting Columns: DL1A, DL4S, DL2, DL5, DL6, DL7, DL8, DL9, DL10, DL11, DL12, DL14, DL15, DL16, DL17, DL18, DL19, DL20, DL21, LC1
Desk Panels: DPA, DPB, DPH, DPF1K, DPF1M, DPF2K, DPF3K, DPF1C, DPF1D, DPF1U, DPF1W, DPF4T, DPG1K, DPG1M, DPG1B, DPG1C, DPT, DP1V01, DP1CS, DP1K, DP1U, DP2K, DP3K, DPN, DPWA, DPI-K, DPI-C
Accessories: BLE2LIN002, BLE2LIN003, DESK SENSOR 1, USB2LIN, DCConnector, BA001

complies with the following parts of the Machinery Directive 2006/42/EC, ANNEX I, *Essential health and safety requirements relating to the design and construction of machinery*:

1.1.2 a) Special use*
1.1.2 b) Selection of the most appropriate methods*
1.1.2 c) Foreseeable misuse*
1.1.2 d) Operator constrains due to the use of personal protective equipment*

1.1.3 Materials and products*

1.2.1 Safety and reliability of control systems
1.2.2 Control devices. Shape, readability, overview*
1.2.3 Starting*
1.2.4 Stopping*

1.5.1 Electricity supply
1.5.10 Radiation. EMC. Emission of electromagnetic radiation, X-rays, γ-rays*
1.5.11 External radiation*

*need to be further evaluated in the end product

We confirm that prior to market introduction the relevant technical documentation is compiled in accordance with part B of Annex VII and the assembly instruction pursuant to Annex VI.

This documentation or part hereof will be transmitted by post or electronically to a reasoned request by the national authorities.
The products mentioned in this document are to be combined for use in height adjustable furniture.

This partly completed machinery must not be put into service until the final machinery into which it is to be incorporated has been declared in conformity with the provisions of the Machinery Directive 2006/42/EC where appropriate.

Nordborg, 2024-02-21

Signature present in original document.

Signed: Dragan Macura (Regulatory Compliance Manager)

Installation

WARNING

Plastic bags

Risk of suffocation

- Keep the plastic bags away from babies and children.

LINAK recommends using the DESKLINE® system in push applications with the motor housing mounted upwards.

Do not bolt the columns to the floor so that free movement is obstructed. This could cause serious damage to the columns in fault situations.

Mounting the column

LINAK frame

DESKLINE® motor-housing columns fit perfectly in a Kick & Click (Desk Frame 1) and a Desk Frame 5 (DF5) top frame.

Find more about the assembly of these top frames here:

- Kick & Click User Manual
- Kick & Click Assembly Instruction
- Kick & Click Assembly Instruction (3rd leg kit)
- Desk Frame 5 User Manual
- Desk Frame 5 Assembly Instructions

Other frames

DESKLINE® motor-housing columns can also be mounted in other top frames.

The motor housing has six M6 threaded holes for mounting on the top frame.

1. Mount the motor housing on the top frame using six M6 screws with the following specifications:
   Quality: Min. grade 8.8
   Length: Max. 10 mm (plus top frame thickness). The screw must not go further than max. 10 mm into the motor housing
2. Fasten the screws thoroughly (torque: max. 7.5 Nm).

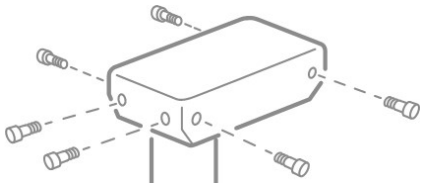

Figure 1 Always use six M6 screws for mounting the motor housing on the top frame

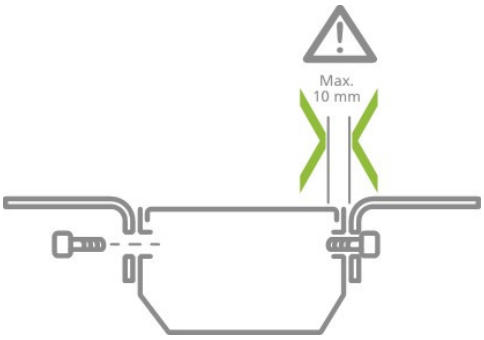

Figure 2 Mounting screws must not go further than max. 10 mm into the motor housing

Sufficient stability of the desk is only obtained if all six M6 screws are used for mounting the motor housing on the top frame. Tests with fixing the motor housing using only four M6 screws have proved that the torsional stability of the desk is insufficient.

Miscellaneous columns

PIEZO™ columns

Piezo-electric sensor

The piezo-electric sensor is an integrated electronic sensor, which reacts on load changes. If the application drives into an obstacle, the load changes. This load change is picked up by the piezo-electric sensor and the signal is sent to the control box.

Columns with bracket

When mounting a crossbar or a cross member on a bracket, it is important to ensure that the bracket is not pulled from the column when tightening the crossbar / cross member.

Follow these guidelines when constructing a desk:

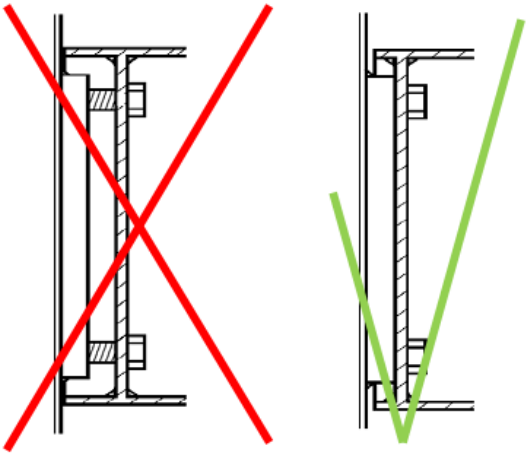

Do not pull the bracket from the column when tightening the screws for the assembly.

The maximum torque for tightening the screws in the bracket is 15 Nm.

To avoid damage to the column there must be at least 1 mm space between the ends of the two M8 screws for the mounting bracket and the column surface. Too long screws will damage the column.

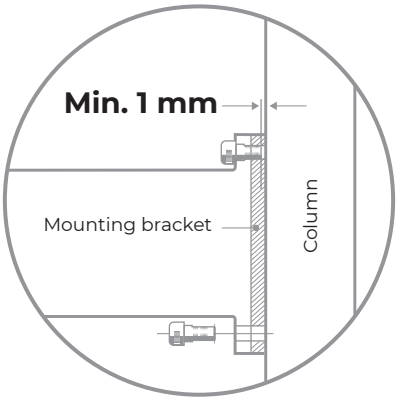

Figure 3 Requirement: Min. 1 mm space between ends of screws and column surface

Mounting the feet

The following instructions apply to all frame types.

The bottom plate has four M6 and two M8 threaded holes.

1. Mount the desk foot on the column bottom using four M6 or two M8 screws with the following specifications:
   Quality: Min. grade 8.8
   Length: Min. 10 mm (plus foot thickness);
   Max. 16 mm (plus foot thickness) for M6
   Max. 14 mm (plus foot thickness) for M8
2. Fasten the screws thoroughly (torque: max. 10 Nm).

The holes in the foot must be sufficiently larger than ø6/ø8 to ensure space for the screw heads to be screwed fully into the foot.

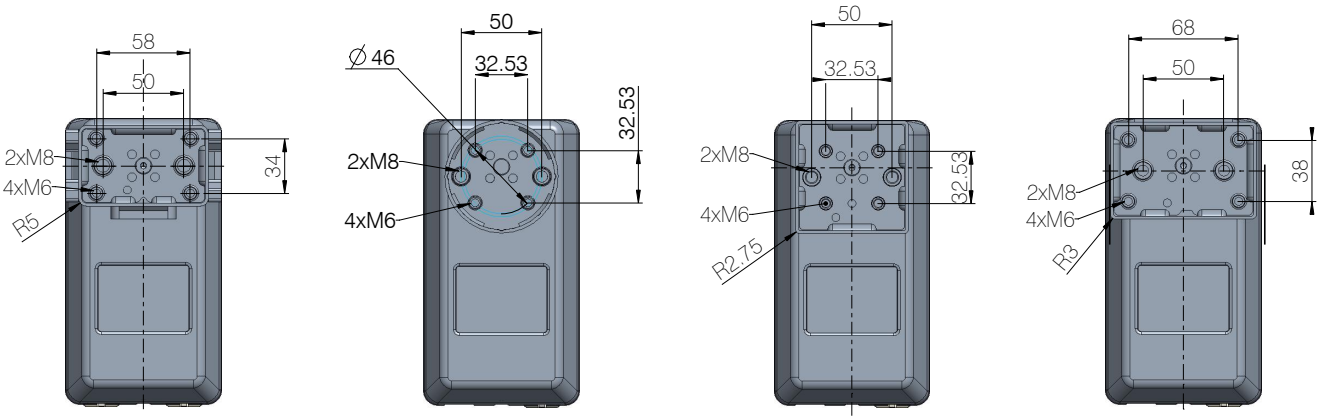

DL5 / DL6 *DL10 / DL11* *DL19* *DL20 / DL21*

Figure 4 Bottom plate

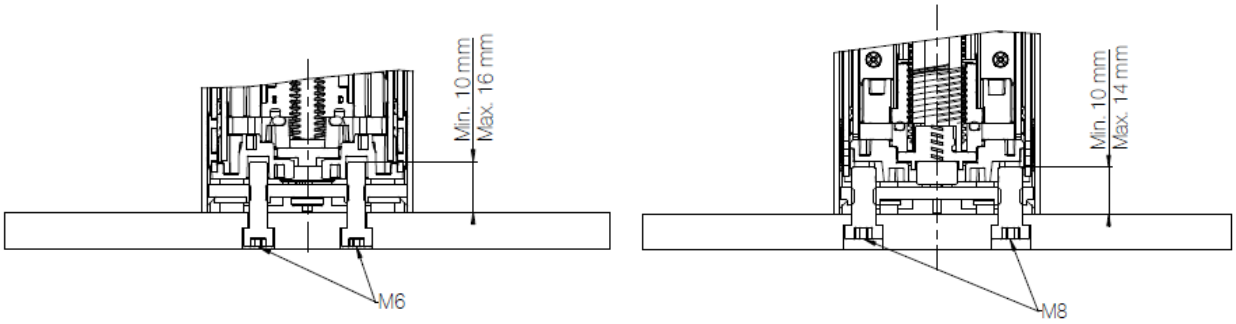

Figure 5 Column bottom mounted on desk foot (left: M6; right: M8)

On-top or reccessed

1. Mount the feet on the columns using supplied screws. Max. torque:10 Nm.

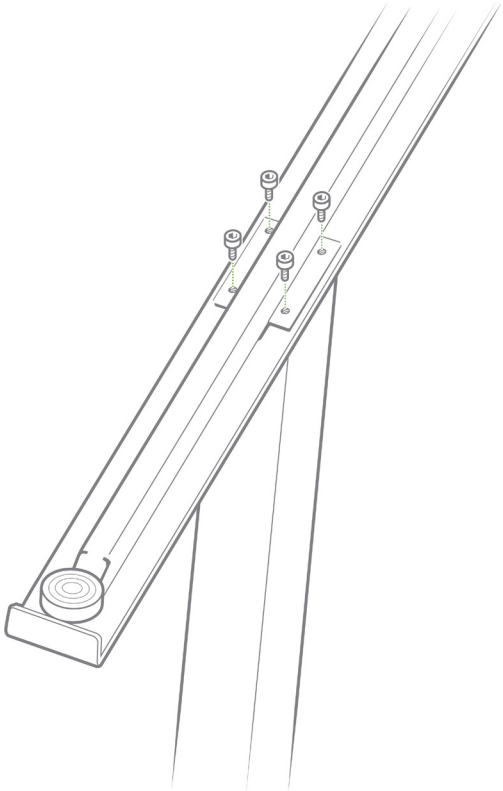

2. Mount the adjustment screws.

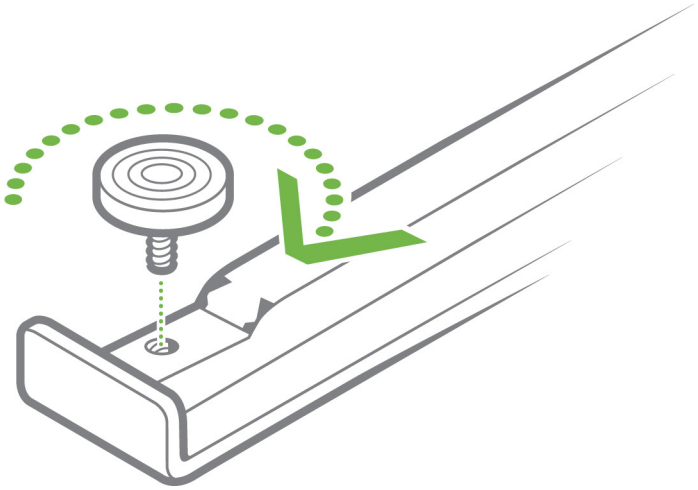

Mounting the CBD6S

Do not pack the CBD6S in heat-insulating material.
Place the CBD6S so it can emit heat through its surface to the surroundings.

The builder of the equipment shall ensure that the use of the component complies with relevant standards – such as the Machine Directive. Care must be taken to avoid squeezing of cables as it can cause movement of the system!

1. Plug the mains cable into the CBD6S.
2. Place the mains cable in the groove for cable relief.

3. If needed, place the other cables in the grooves to optimise the application design and manage the system cables.

4. Mount the CBD6S using two screws with a head diameter of 10 mm (8 to 10 mm can be used).
5. Fasten the mounting screws (max. torque 1 Nm).

Notes:

- If the control box is mounted in a top frame bar with the width of the motor housing, it can be mounted with only one screw
- The surface on which the control box is mounted should have an evenness better than ±0.5 mm
- The control box can also be mounted using one or two M6 nuts and screw counterparts

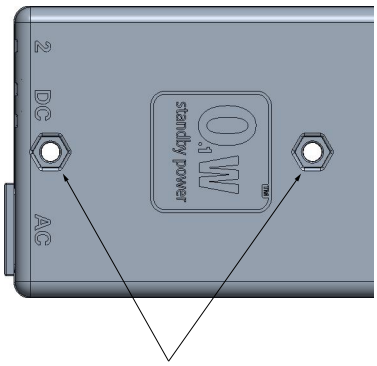

- The mains plug must be accessible when the CBD6S is mounted so that the supply to the CBD6S can be disconnected if replacement is required

It is important to ensure that the motor cables are fixed, but not tightened, near the control box **and** near the columns.

Fix the cable to the applicationframe using a clip observing the **30 mm minimum bending radius (R)**.

Installation tips

Sound reduction

The sound from the lifting column spreads as vibrations to the tabletop which amplifies the sound. This can, however, be reduced.

1. Place vibration/shock-absorbing material between tabletop and top frame.

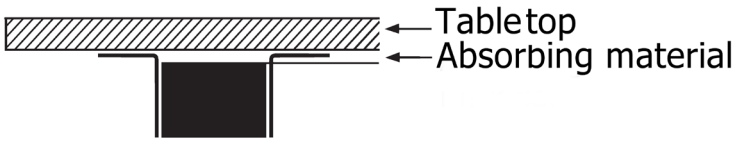

Figure 6 Assembled desk

Monitor placement

Placement of a monitor directly above the motor housing may cause malfunction of the monitor. Magnets inside the motor may interrupt the picture on the monitor depending on the distance and type of monitor. If this is the case, the problem may be solved by placing an iron plate/tube or another magnetic material, somewhat larger than the motor housing, between the motor and the tabletop.

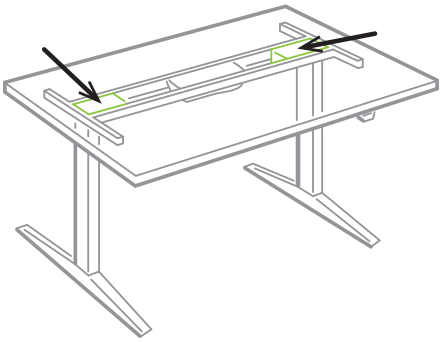

Figure 7 Recommended placement of an iron plate/tube or another magnetic material

Bench systems

In case DS1 devices are installed in the bench system, please note:

If one of the desks is driving up or down, and the other desk is being pushed or suddenly moves, the benching may cause the DS1 to trigger and stop the driving of the desk.

DESKLINE bench systems

For creation of a complete DESKLINE bench system, join two assembled desks by use of two cross members. Mount bench feet on the columns.

Connection

The control box must only be connected to the voltage stated on the label.

Connect the columns and the desk panel to the control box as described below.

Connecting the system

1. Connect the first DL/DB to socket 1 next to control port A2 on the control box using the 6-pin plug on the motor cable. Channel 1 is the channel closest to the control port.
2. Connect further DL/DB to sockets 2, 3 and 4 in sequence.
3. Connect the desk panel to control port A1 or control port A2.
4. Check that the voltage stated on the label corresponds to the mains power.
   If not, do not plug in the mains cable.
5. Plug in the mains cable.
6. Switch on the power.

Initialising the system

Downward direction

1. Press the desk panel to drive the system down. Keep pressing the desk panel.
   The legs/actuators run down to the "buffer" causing cut-off due to excess current, after which they run approx. 3 mm upwards and thereby free of the "buffer".
2. Release the desk panel when the movement stops.

The system is now initialised in downward direction.

Upward direction

No initialisation in upward direction required.

Operation

This document describes the installation of the DESKLIFT™ column system. For more information on the operation of the system, please refer to the relevant desk panel/control User Manual which is availble here:

- Desk panels/controls (DPA, DPB, DPF, DP1CS, DPH, DPT, and BP10)
- Desk Panel DPG
- Desk Panel DPI

Maintenance

Clean dust and dirt from the outside of the system at appropriate intervals and inspect for damage and breaks.

Inspect connections, cables, and plugs without disconnecting, and check functioning as well as fixing points.

CAUTION

Loose screws

Risk of loss of stability

- Check for loose screws on a regular basis. Fasten if necessary.

Cleaning the desk panel

Clean your desk panel with a soft damp cloth. Universal cleaning detergents may be used.

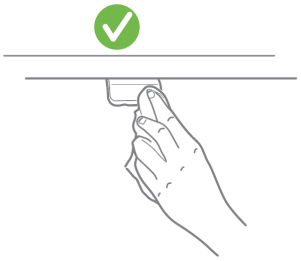

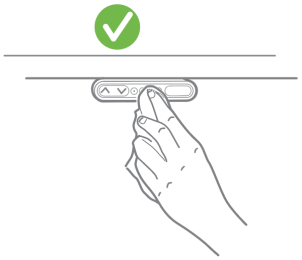

For disinfection of the desk panel, use a 70 percent isopropyl alcohol either as a wipe or add a small amount to a soft cloth.

CAUTION

Risk of damaging the desk panel

The desk panel is not a sealed unit and there are electronics inside it.

- Ensure that liquids or moisture does not enter an opening. It may damage the PCB and ruin the desk panel.
- Avoid spraying the cleaning agent or disinfectant directly on the desk panel.

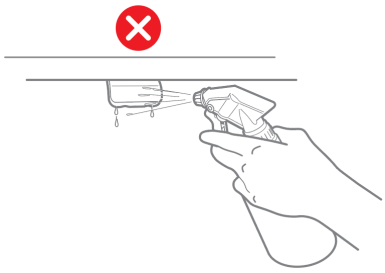

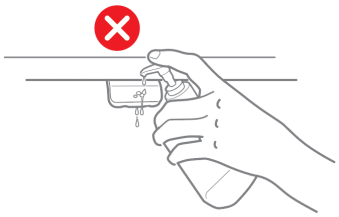

- Cleaning agents and disinfectants must not be highly alkaline or acidic (pH value must be 6 to 8), and they must not contain bleach or chlorine.
- Do not use hand sanitizer gel as a cleaning agent.

Repair and disposal

WARNING

Opening the product

Risk of injury to persons and of malfunction

- Do not open the product unless you are authorised to do so.

Only an authorised LINAK® service centre should repair the LINAK products. Products to be repaired under warranty must be sent to an authorised LINAK service centre.

In order to avoid the risk of malfunction, all product repairs must only be carried out by an authorised LINAK Service shop or repairers, as special tools and parts must be used.

If a product is opened by unauthorised personnel there is a risk that it may malfunction at a later date.

LINAK systems or components may be disposed of, possibly by dividing them into different waste groups for recycling or combustion.

We recommend that our product is disassembled as much as possible at the disposal and that you try to recycle it. LINAK systems or components should be disposed of in accordance with the environmental regulations applicable in the respective country.

Almost all our cast plastic parts are supplied with an interior code for plastic type and fibre contents, if any.

Servicing double-insulated products

In a double-insulated product, two systems of insulation are provided instead of grounding. No grounding means is provided on a double-insulated product, nor is means for grounding to be added to the product. Servicing a double-insulated product requires extreme care and knowledge of the system, and is to be done only by qualified service personnel. Replacement parts for a double-insulated product must be identical to the parts they replace. A double-insulated product is marked with the words "Double insulation" or "Double insulated." The symbol ⧈ (square within a square) can also be marked on the product.

Updated manuals and declarations can always be found at:
https://www.linak.com/user-manuals/deskline/.

Accessories and spare parts

Accessories

Order from your nearest LINAK® sales office, distributor or subsidiary.

Spare parts

Please contact your nearest LINAK sales office for information on spare parts.

Contacts

FACTORIES

Denmark - Headquarters
LINAK A/S
Phone: +45 73 15 15 15
Fax: +45 74 45 80 48
Fax (Sales): +45 73 15 16 13
Web: www.linak.com

China
LINAK (Shenzhen) Actuator Systems, Ltd.
Phone: +86 755 8610 6656
Phone: +86 755 8610 6990
Web: www.linak.cn

Slovakia
LINAK Slovakia s.r.o.
Phone: +421 51 7563 444
Web: www.linak.sk

Thailand
LINAK APAC Ltd.
Phone: +66 33 265 400
Web: www.linak.com

USA
LINAK U.S. Inc.
Americas Headquarters
Phone: +1 502 253 5595
Fax: +1 502 253 5596
Web: www.linak-us.com
www.linak-latinamerica.com

SUBSIDIARIES

Australia
LINAK Australia Pty. Ltd
Phone: +61 3 8796 9777
Fax: +61 3 8796 9778
E-mail: sales@linak.com.au
Web: www.linak.com.au

Austria
LINAK Zweigniederlassung - Österreich (Wien)
Phone: +43 (1) 890 7446
Fax: +43 (1) 890 744615
E-mail: info@linak.de
Web: www.linak.at - www.linak.hu

Belgium
LINAK Actuator-Systems NV/SA
(Belgium & Luxembourg)
Phone: +32 (0)9 230 01 09
E-mail: beinfo@linak.be
Web: www.linak.be - www.fr.linak.be

Brazil
LINAK Do Brasil Comércio De Atuadores Ltda.
Phone: +55 (11) 2832 7070
Fax: +55 (11) 2832 7060
E-mail: info@linak.com.br
Web: www.linak.com.br

Canada
LINAK Canada Inc.
Phone: +1 502 253 5595
Fax: +1 416 255 7720
E-mail: info@linak.ca
Web: www.linak-us.com

Czech Republic
LINAK C&S s.r.o.
Phone: +42 058 174 1814
Fax: +42 058 170 2452
E-mail: info@linak.cz
Web: www.linak.cz - www.linak.sk

Denmark - International
LINAK International
Phone: +45 73 15 15 15
E-mail: info@linak.com
Web: www.linak.com

Denmark - Sales
LINAK Danmark A/S
Phone: +45 86 80 36 11
Fax: +45 86 82 90 51
E-mail: linak@linak-silkeborg.dk
Web: www.linak.dk

Finland
LINAK OY
Phone: +358 10 841 8700
E-mail: linak@linak.fi
Web: www.linak.fi

France
LINAK France E.U.R.L
Phone: +33 (0) 2 41 36 34 34
Fax: +33 (0) 2 41 36 35 00
E-mail: linak@linak.fr
Web: www.linak.fr

Germany
LINAK GmbH
Phone: +49 6043 9655 0
Fax: +49 6043 9655 60
E-mail: info@linak.de
Web: www.linak.de

India
LINAK A/S India Liaison Office
Phone: +91 120 4531797
Fax: +91 120 4786428
E-mail: info@linak.in
Web: www.linak.in

Ireland
LINAK UK Limited (Ireland)
Phone: +44 (0)121 544 2211
Fax: +44 (0)121 544 2552
+44 (0)796 855 1606 (UK Mobile)
+35 387 634 6554 (Rep.of Ireland Mobile)
E-mail: sales@linak.co.uk
Web: www.linak.co.uk

Italy
LINAK ITALIA S.r.l.
Phone: +39 02 48 46 33 66
Fax: +39 02 48 46 82 52
E-mail: info@linak.it
Web: www.linak.it

Japan
LINAK K.K.
Phone: 81-45-533-0802
Fax: 81-45-533-0803
E-mail: linak@linak.jp
Web: www.linak.jp

Malaysia
LINAK Actuators Sdn. Bhd.
Phone: +60 4 210 6500
Fax: +60 4 226 8901
E-mail: info@linak-asia.com
Web: www.linak.my

Netherlands
LINAK Actuator-Systems B.V.
Phone: +31 76 5 42 44 40 /
+31 76 200 11 10
E-mail: info@linak.nl
Web: www.linak.nl

New Zealand
LINAK New Zealand Ltd
Phone: +64 9580 2071
Fax: +64 9580 2072
E-mail: nzsales@linak.com.au
Web: www.linak.com.au

Norway
LINAK Norge AS
Phone: +47 32 82 90 90
E-mail: info@linak.no
Web: www.linak.no

Poland
LINAK Polska
LINAK Danmark A/S (Spólka Akcyjna)
Phone: +48 22 295 09 70 /
+48 22 295 09 71
E-mail: info@linak.pl
Web: www.linak.pl

Republic of Korea
LINAK Korea Ltd.
Phone: +82 2 6231 1515
Fax: +82 2 6231 1516
E-mail: info@linak.kr
Web: www.linak.kr

Slovakia
LINAK Slovakia S.R.O.
Phone: +421 51 7563 444
Web: www.linak.sk

Spain
LINAK Actuadores, S.L.u
Phone: +34 93 588 27 77
Fax: +34 93 588 27 85
E-mail: esma@linak.es
Web: www.linak.es

Sweden
LINAK Scandinavia AB
Phone: +46 8 732 20 00
Fax: +46 8 732 20 50
E-mail: info@linak.se
Web: www.linak.se

Switzerland
LINAK AG
Phone: +41 43 388 31 88
E-mail: info@linak.ch
Web: www.linak.ch - www.fr.linak.ch
www.it.linak.ch

Taiwan
LINAK (Shenzhen) Actuator systems Ltd.
Taiwan Representative office
Phone: +886 2 272 90068
Fax: +886 2 272 90096
E-mail: sales@linak.com.tw
Web: www.linak.com.tw

Turkey
LINAK İth. İhr. San. ve Tic. A.Ş.
Phone: + 90 312 4726338
Fax: + 90 312 4726635
E-mail: info@linak.com.tr
Web: www.linak.com.tr

United Kingdom
LINAK UK Limited
Phone: +44 (0)121 544 2211
Fax: +44 (0)121 544 2552
E-mail: sales@linak.co.uk
Web: www.linak.co.uk

DISTRIBUTORS

Argentina
Novotec Argentina SRL
Phone: 011-4303-8989 / 8900
Fax: 011-4032-0184
E-mail: info@novotecargentina.com
Web: www.novotecargentina.com

Colombia
MEM Ltda
Phone: +[57] (1) 334-7666
Fax: +[57] (1) 282-1684
E-mail: servicioalcliente@memltda.com.co
Web: www.mem.net.co

India
Mechatronics Control Equipments India Pvt Ltd
Phone: +91-44-28558484, 85
E-mail: bala@mechatronicscontrol.com
Web: www.mechatronicscontrol.com

Indonesia
PT. Himalaya Everest Jaya
Phone: +6 221 544 8956 /+6 221 544 8965
Fax: +6 221 619 1925
Fax (Sales): +6 221 619 4658
E-mail: hejplastic-div@centrin.net.id
Web: www.hej.co.id

Israel
NetivTech LTD
Phone: +972 55-2266-535
Fax: +972 2-9900-560
Email: info@NetivTech.com
Web: www.netivtech.com

Singapore
Servo Dynamics Pte Ltd
Phone: +65 6844 0288
Fax: +65 6844 0070
E-mail: servodynamics@servo.com.sg

South Africa
Industrial Specialised Applications CC
Phone: +27 011 466 0346
E-mail: gartht@isagroup.co.za
Web: www.isaza.co.za

United Arab Emirates
Mechatronics
Phone: +971 4 267 4311
Fax: +971 4 267 4312
E-mail: mechtron@emirates.net.ae

Terms of use

LINAK® takes great care to provide accurate and up-to-date information about its products. However, it is the responsibility of the user to determine the suitability of LINAK products for any specific application. Due to ongoing product development, LINAK products are subject to continuous modifications and changes. LINAK reserves the right to make such modifications, updates, and changes without prior notice. For this reason, LINAK cannot guarantee the accuracy or current status of printed information about its products.

LINAK uses its best efforts to fulfil orders. However, for the reasons mentioned above, LINAK cannot guarantee availability of any particular product at any given time. LINAK reserves the right to discontinue the sale of any product displayed on its website or listed in its catalogues or in other written material created and produced by LINAK, LINAK subsidiaries, or LINAK affiliates.
All sales are subject to the applicable terms and conditions of sale and delivery available on LINAK websites.
LINAK and the LINAK logotype are registered trademarks of LINAK A/S. All rights reserved.

Copyright® LINAK • 2026-09 • LIT-13-02-091 B

WE IMPROVE YOUR LIFE