MEDLINE® IMPROVING EFFICIENCY CARELINE® IMPROVING EFFICIENCY

JUMBO™
User Manual

LINAK® WE IMPROVE YOUR LIFE

Contents

Preface **4**
GENERAL ASSEMBLY INSTRUCTIONS **5**
DECLARATION OF INCORPORATION OF PARTLY COMPLETED MACHINERY **6**
Important information **7**
General warnings **8**
General recommendations **11**
General Regulatory Considerations **12**
General warranty periods **12**
Electromagnetic Compatibility (EMC) **13**
EMC Warnings 13
EMC responsibilities for LINAK actuator systems 14
Electrostatic discharge (ESD) 15
RF transmitter/receiver properties 16
FCC and IC Statements 16
Symbols **18**
Batteries **20**
General battery warnings 20
Lithium ion batteries 21
Lead acid batteries 24
System description **25**
Connecting the system **25**
General environmental conditions **26**
Information on start-up, deinstallation and operation **27**
Before installation, deinstallation or troubleshooting 27
Before start-up 27
During operation 27
Cleaning **28**
Cleaning warnings 28
Rinsing aids 29
IPX6 Washable DURA™ 30
Cable wash 31
General maintenance **32**
Repair and disposal **33**
Troubleshooting **34**

BAJ **35**
BAJL **36**
CBJ2 ..... **40**
CBJ Care **44**
CHJ2 ..... **49**
Mounting bracket MBJ **50**
CBJ Home **51**
CH01 ..... **54**
Contacts **55**

Preface

Dear User,

We are delighted that you have chosen a LINAK® product.

LINAK systems are high-tech products based on many years of experience in the manufacture and development of actuators, lifting columns, desk frames, electric control boxes, controls, batteries, accessories and chargers.

This User Manual does not address the end user. It is intended as a source of information for the equipment or system manufacturer only, and it will tell you how to install, use and maintain your LINAK product/system. The manufacturer of the end product has the responsibility to provide a User Manual where relevant safety information from this manual is passed on to the end user.

We are convinced that your LINAK system will give you many years of problem-free operation.

Before our products leave the factory they undergo full function and quality testing. Should you, nevertheless, experience problems with your product/system, you are always welcome to contact your local supplier.

LINAK subsidiaries and some distributors situated all over the world have authorised service centres, which are always ready to help you.

LINAK provides a warranty on all products (see warranty section).

This warranty, however, is subject to correct use in accordance with the specifications, maintenance being done correctly and any repairs being carried out at a service centre, which is authorised to repair LINAK products.

Changes in installation and use of LINAK systems can affect their operation and durability. The products are only to be opened by authorised personnel.

This User Manual has been written on the basis of the present technical knowledge. LINAK is constantly keeping the information updated and we therefore reserve the right to carry out technical modifications.

The introductory pages of this manual may contain information that is not applicable to the technical product pages and are to be seen as general information for all LINAK products.

LINAK A/S

GENERAL ASSEMBLY INSTRUCTIONS

Please read the following safety information carefully. Ensure that all staff who are to connect, mount, or use the actuator are in possession of the necessary information and that they have access to this assembly instruction.

Persons who do not have the necessary experience or knowledge of the product/products must not use the product/products. Besides, persons with reduced physical or mental abilities must not use the product/products, unless they are under surveillance or they have been thoroughly instructed in the use of the apparatus by a person who is responsible for the safety of these persons. Moreover, children must be under surveillance to ensure that they do not play with the product.

Warnings

Failure to comply with these instructions may result in accidents involving serious personal injury.

It is important for everyone who is to connect, install, or use the systems to have the necessary information and access to the User Manual on www.linak.com.

- If there is visible damage on the product it must not be installed.
- If the control box / Twindrive makes unusual noises or smells, switch off the mains voltage immediately.
- The products must only be used in an environment that corresponds to their IP protection.
- The cleaners and disinfectants must not be highly alkaline or acidic (pH value must be 6 to 8).
- Irrespective of the load, the duty cycle stated in the data sheets, must NOT be exceeded.
- The DESKLINE® systems can only be used in push applications.
- The control box / Twindrive must only be connected to the voltage stated on the label.
- System not specified for pull must only be used in push applications.
- Fastening screws and bolts must be tightened correctly.
- Do not open the closing device on the Twindrive during operation.
- Specifications on the label must under no circumstances be exceeded.
- NOT TO BE OPENED BY UNAUTORISED PERSONNEL.
- Use only the actuator within specified working limits.
- Note that during construction of applications, in which the actuator is to be fitted, there must be no risk of personal injury, such as squeezing of fingers or arms.
- If irregularities are observed, the actuator must be replaced.
- If the actuator is used for pull in an application where personal injury can occur, the following is valid: It is the application manufacturer's responsibility to incorporate a suitable safety arrangement, which will prevent personal injury from occurring, if the actuator should fail.
- MEDLINE® & CARELINE® products are rated to operate at an altitude < 2000 m.

Recommendations

Failure to follow these instructions can result in the actuator being damaged or being destroyed.

- Before you start mounting/dismounting, ensure that the following points are observed:
  - The actuator is not in operation.
  - The mains current supply is switched off and the plug has been pulled out.
  - The actuator is free from loads that could be released during this work.
- Before you put the actuator into operation, check the following:
  - The actuator is mounted correctly as indicated in the relevant user instructions.
  - The equipment can be freely moved over the actuator's whole working area.
  - The actuator is connected to a mains electricity supply/transformer with the correct voltage and which is dimensioned and adapted to the actuator in question.
  - Ensure that the voltage applied matches the voltage specified on the actuator label.
  - Ensure that the connection bolts can withstand the wear.
  - Ensure that the connection bolts are secured safely.
- During operation
  - Listen for unusual sounds and watch out for uneven running. Stop the actuator immediately if anything unusual is observed.
  - Do not side load the actuator.
  - Use only the actuator within the specified working limits.
  - Do not kick or step on the actuator.
- When the equipment is not in use
  - Switch off the mains supply or pull out the plug in order to prevent unintentional operation.
  - Check regularly the actuator and joints for extraordinary wear.
- Note: If the actuator is operated as a hand crank, it must be operated by hand, otherwise there is a risk of overloading the actuator and hereby damage the actuator.
  When changing the cables on a LINAK actuator, it is important that this is done carefully, in order to protect the plugs and pins.
  Please ensure that the plug is in the right location and fully pressed in before mounting the cable lid.

DECLARATION OF INCORPORATION OF PARTLY COMPLETED MACHINERY

LINAK A/S
Smedevænget 8
DK - 6430 Nordborg

LINAK A/S hereby declares that LINAK DESKLINE® products, characterised by the following models and types:

Control Boxes	CBD6S
Linear Actuators	DB5, DB6, DB14, LA23, LA31
Lifting Columns	DL1A, DL2, DL4S, DL5, DL6, DL8, DL9, DL10, DL11, DL12, DL14, DL15, DL16, DL17, DL18, DL19, DL20, DL21, BASE1, LC1
Desk Panels	DPA, DPB, DPH, DPF, DPG, DPT, DP1CS, DPI
Wireless Controls	BP10
Frames and Feet	Kick & Click, DF2, DF3, DF4, DF5, DLF
Accessories	BA001, BLE2LIN, CHUSB, DESK Sensor, SLS, SMPS, USB2LIN, WiFi2LIN, DC Connector, RFRL

LINAK A/S hereby declares that LINAK HOMELINE® products, characterised by the following models and types:

Control Boxes	CBD6DC
Linear Actuators	LA10, LA18, LA40 HOMELINE, BASE1
Dual Actuators	TD4, TD5
Controls	BP10, HC10, HC20, HC40, HC50, HC60
Accessories	BA002, CP, BLE2DC, BLE2LIN, LED Light Rail, MD1, SMPS, WiFi2LIN

LINAK A/S hereby declares that LINAK MEDLINE® & CARELINE® products, characterised by the following models and types:

Control Boxes	CA20, CA30, CA40, CA63, CAL40, CB6, CB6S, CB6P2, CB8, CB9, CBJ2, CBJ Care, CBJ Home, CO11, CO40, CO41, CO53, CO61, CO65, CO71, COL50, OPS, PJ2
Linear Actuators	KA19, KA30, KA30 ICA, LA20, LA23, LA24, LA24 ICA, LA27, LA28, LA29, LA30, LA31, LA34, LA40, LA42, LA44, LA54
Lifting Columns	BL1, LC1, LC3
Controls	ABL, ACC, ACK, ACO, ACOD, ACOM, ACL, DP, DPH, FS, FS3, FPP, HB30, HB70, HB80, HB100, HB190, HB200, HB400, HD80, HD600, HL70, HL400, SC01
Accessories	BA15, BA16, BA18, BA19, BA22, BAJ, BAJL, BAL40, BAL50, CH01, CHJ2, CHL40, CHL50, DJB, LIN2OB, MJB2, MJB5 Plus, Massage Motor, PJB4, QLCI2, SLS, SMPS10, UBL, UBL2, UBL4 Motion, USB-A Power Adapter

LINAK A/S hereby declares that LINAK TECHLINE® products, characterised by the following models and types:

Linear Actuators	LA12, LA14, LA21, LA23, LA25, LA30, LA33, LA35, LA36, LA37, LA73, LA76, LA77
Lifting Columns	LC3 IC
Accessories	FMB

comply with the following parts of the Machinery Directive 2006/42/EC, ANNEX I, Essential health and safety requirements relating to the design and construction of machinery: 1.5.1 Electricity supply

The relevant technical documentation is compiled in accordance with part B of Annex VII and this documentation or part hereof will be transmitted by post or electronically to a reasoned request by the national authorities.

This partly completed machinery must not be put into service until the final machinery into which it is to be incorporated has been declared in conformity with the provisions of the Machinery Directive 2006/42/EC where appropriate.

Nordborg, 2026-08-11

John Kling

LINAK A/S

John Kling, B.Sc.E.E., Certification and Regulatory Affairs
Authorised to compile the relevant technical documentation

Original declaration

Copyright© LINAK • 2026-10 • LIT-09-02-001 G

Important information

LINAK® products, within the scope of this manual, are not classified as medical electrical equipment or systems, nor do they fall within the scope of the EU Medical Device Directive/Regulation or other similar national regulations. The products are components to be built into a piece of medical electrical equipment by a manufacturer.

To support the assessment and certification task of the complete medical electrical equipment or system worldwide, LINAK provides certification, on a component level, according to the IEC 60601-1, (Medical electrical equipment – Part 1: General requirements for basic safety and essential performance) as recognised components by NRTL (Nationally Recognized Testing Laboratories).

Description of the various signs used in this manual:

Warnings

Failure to comply with these instructions may result in accidents involving serious personal injury.

Recommendations

Failing to follow these instructions can result in product damage.

Please read the following safety information carefully:

Ensure that all staff who are to connect, mount, or use the actuator system are in possession of the necessary information and that they have access to these assembly instructions.

Persons who do not have the necessary experience or knowledge of LINAK products should not use these. Moreover, persons with reduced physical or mental abilities must not use the products, unless they are under surveillance or they have been thoroughly instructed in the use of the equipment by a person who is responsible for the safety of these persons. Moreover, children must be under surveillance to ensure that they do not play with the product.

Please be aware that LINAK has taken precautions to ensure the safety of the actuator system. The manufacturer/OEM is responsible for the overall approval of the complete application.

LINAK recommends to use the actuators in push applications rather than pull applications.

LINAK actuators are not to be used for repeated dynamic push-to-pull movements.

For general pull applications or repeated dynamic push-to-pull movements in the application, please contact LINAK A/S if in doubt.

LINAK actuators and electronics generally fall outside the IEC 60601-1 definition of applied parts and are not marked as such.

However, assessing the risk whether actuators and electronics can unintentionally come into contact with the patient, determines that they are subject to the requirements for applied parts. All the relevant requirements and tests of the standard are carried out as part of the IEC CB* Scheme/NRTL** assessment.

* CB: Certification Body

**NRTL: Nationally Recognised Testing Laboratory

General warnings

Failure to comply with these instructions may result in accidents involving serious personal injury:

The medical device manufacturer is responsible for the incorporation of a suitable safety arrangement, if the actuator or lifting column is used for pull in an application where personal injury can occur, which will prevent personal injury from occurring in case of actuator failure.

Note that during construction of applications, in which the actuator is to be fitted, there must be no possibility of personal injury, for example the squeezing of fingers or arms.

The plastic parts in the system cannot tolerate cutting oil.

Assure free space for movement of the application in both directions to avoid a blockade.

The application and actuators are only to be operated by instructed personnel.

In applications with spline function, the blockage by an obstacle when the application is moving inwards, the removal of the obstacle will cause the load to drop until the spindle hits the nut.

Do not turn the outer tube.

Do not use chemicals.

Inspect the actuator system regularly for damage and wear.

Do not expose LINAK actuator system components to high intensity ultraviolet radiation disinfection lamps. This may damage the enclosure, supporting parts and cables.

LINAK actuators and electronics are not designed for use within the following fields:

- In the presence of a flammable anesthetic mixture with air or with oxygen or nitrous oxide
- Planes and other aircrafts
- Explosive environments
- Nuclear power generation

If faults are observed, the products must be replaced.

A LINAK control box, actuator and accessory component must, in the final application, be placed where it is not exposed to any impact. This is to prevent damage if a passer-by accidentally hits it with an object or when cleaning the floor with a broom or a mop. On a medical bed e.g. this might be underneath the mattress support platform. If necessary to mitigate this risk, additional protection might be required.

To avoid unintended movement, prevent foreign objects or persons from unintentionally activating a footswitch or a hand control at any time, for instance during normal use or maintenance.

If there is visible damage on the product it should not be installed.

If the actuator system makes unusual noise or smells, switch off the mains voltage immediately and disconnect batteries, if applicable.

The products must only be used in an environment that corresponds to their IP protection class.

The cleaners and disinfectants must not be highly alkaline or acidic (pH value 6-8). See cleaning section.

Irrespectively of the load, the duty cycle stated on the product label must NOT be exceeded.

The control box must only be connected to the voltage stated on the label.

Systems not specified for pull must only be used in push applications.

Fastening screws and bolts must be tightened correctly.

Specifications on the product label must under no circumstances be exceeded.

NOT TO BE OPENED BY UNAUTHORISED PERSONS.

Only use the actuator within specified working limits.

Be aware that during the design of medical devices, the risk of personal injury (for instance squeezing of fingers or arms) must be minimised.

If irregularities are observed, the actuator must be replaced.

All cables must be mounted in such a way that they are not trapped or exposed to tension or sharp objects when the application is moved in different directions.

General recommendations

Failing to follow these instructions may result in actuator system damage:

The duty cycle printed on the actuator system label must always be respected. If exceeded, there is a risk that the actuator system is damaged. Unless otherwise specified on the label, the duty cycle is max. 10%, max. 2 min. in use followed by 18 min. not in use.

All detachable connections between components must be locked by the cable locking mechanism - when applicable.

It is recommended to have options like quick release, manual lowering or similar built into the system in case of power loss or system failure or if movement of the system is critical. After service it is recommended to test the system for correct functionality before it is put back into operation.

Prior to assembly/disassembly, ensure that the following points are observed:

- The actuator system is not in operation.
- The mains current supply is switched off and the plug has been pulled out.
- Batteries - if applicable - may also power the system.
- Actuators are free from loads that could be released during this work.

Prior to operating the actuator system, check the following:

- Actuator system components are correctly mounted as indicated in the product-specific user instructions.
- The equipment can be operated in its entire intended range of movement.
- Ensure that the load-supporting bolts can withstand the wear.
- Ensure that the load-supporting bolts are secured safely.

During operation:

- Listen for unusual sounds and watch out for uneven movement. Stop the actuator system immediately if anything unusual is observed.
- Do not sideload the actuator.
- Do not step on or kick any LINAK component.

When the equipment is not in use:

- Switch off the mains supply or pull out the plug in order to prevent unintentional operation.

Cables and plugs:

- It is important to remove the transport plastic bag before using the cable.
- When changing the cables on a LINAK® actuator system, it is important that this is done carefully in order to protect the plugs and pins.
- Please ensure that the plug is in the right location and properly inserted before the cable lid is mounted.

General Regulatory Considerations

Certain LINAK components are not individually certified under IEC 60601-1 due to incomplete constructional features that prevent full compliance. Specifically, products without enclosures, such as for instance those exposing printed circuit boards or mechanical parts, do not meet the safety requirements outlined in the standard.

Medical equipment must comply with strict regulations to ensure the safety of patients and healthcare professionals.

When LINAK components are integrated into a medical device, it is the responsibility of the medical device manufacturer to ensure that these components are adequately enclosed.

Ultimately, the medical device manufacturer is responsible for ensuring that the final product complies fully with IEC 60601-1 and all other applicable standards.

General warranty periods

As general warranty period, LINAK provides 5 years (60 months) warranty on MEDLINE and CARELINE products used in beds and medical applications. If MEDLINE and CARELINE products are used in other applications, they will be covered by 1½ years (18 months) warranty.

Batteries are covered by a specific product warranty of 12 months.

External products that are not manufactured by LINAK A/S: 12 months are added to the warranty period, for instance for transportation and stocking. Relabelling of these products only takes place, if the production date exceeds one year from the date of dispatch to the customer.

If there is any doubt whether returned products are covered by the warranty, they are covered by the warranty. Please use the date of the control box or actuator as reference, if possible.

Electromagnetic Compatibility (EMC)

EMC Warnings

Electromagnetic compatibility – general

LINAK® actuator systems bear the CE marking as an attestation of compliance with the EMC Directive 2014/30/EU. The systems are designed to meet all requirements of applicable standards and have been tested to meet IEC 60601-1-2 requirements.

Emission:

LINAK Actuator Systems are CISPR 11, Group 1, Class B products, comply with IEC 61000-3-2, Class A and IEC 61000-3-3.

Immunity:

Test levels are according to Professional Healthcare Facility and Home Healthcare Facility Environment.

Electromagnetic phenomena are evaluated on a system level, with the actuator connected to a LINAK control box and accessories.

LINAK always recommends to perform verification tests on the final medical device.

Electromagnetic compatibility – third party components

Use of accessories, transducers and cables other than those specified by LINAK could result in increased electromagnetic emissions or decreased electromagnetic immunity of the actuator system and result in improper operation.

Electromagnetic compatibility – interference with other equipment in general

Use of the actuator system adjacent to or stacked with other equipment should be avoided as this could result in improper operation. If such use is necessary, the actuator system and the other equipment should be observed to verify that they are operating properly.

If the user notes unusual behavior of the actuator system, in particular if such behaviour is intermittent and associated with the standing right next to mobile phones, microwaves and radio broadcast masts, this could be an indication of electromagnetic interference.

If such behaviour occurs, try to move the actuator system further away from the interfering equipment.

Electromagnetic compatibility – interference with other equipment, RF communications

RF communication equipment (e.g. RFID, wireless RF etc. including peripherals such as antenna cables and external antennas) should be used at a distance no closer than 30 cm (12 inches) to any part of the actuator system. This also applies to cables specified by the manufacturer. Otherwise, a performance degradation of this equipment could result.

EMC responsibilities for LINAK actuator systems

LINAK verifies the EMC performance of each LINAK product and approves them individually. The LINAK products can be combined and integrated into many different systems. LINAK also verifies the system EMC performance on commonly used combinations.

LINAK has certificates in accordance with applicable standards for each product and provides the customers, who are building the application and integrating these products into systems (systems with control box, actuators, cables, batteries, etc.), with these certificates.

However, EMC testing of LINAK products in generic LINAK systems is not made in an environment that corresponds to the specific application environment which differs from the generic testing environment. There will be differences that can affect the EMC performance in the specific target application.

The customer is responsible for qualifying and approving the complete application including the LINAK system.

Regulatory standard

LINAK products, being components to be incorporated by a Manufacturer [definition: IEC 60601-1 ed.3.1, cl. 3.55] into Medical Electrical Equipment [definition: IEC 60601-1 ed.3.1, cl. 3.63], are tested concerning the EMC phenomena according to the Collateral Standard IEC 60601-1-2 ed. 4.1.

IEC 60601-1-2 ed. 4.1 sets forth the requirements for the electromagnetic compatibility of Medical Electrical Equipment, ensuring that devices operate safely and effectively within their intended environments. Compliance with this standard is essential to minimize electromagnetic interference and maintain the integrity and performance of Medical Devices.

Furthermore, IEC 60601- 1-2 ed. 4.1 states:

"This collateral standard recognizes that the Manufacturer has the responsibility to design and perform Verification of Medical Electrical Equipment and Medical Electrical Systems to meet the requirements of this Collateral Standard and to disclose information to the Responsible Organization or Operator so that the Medical Electrical System will remain safe throughout its Expected Service Life."

Qualification process of a new application

The qualification process for a new application is normally done in cooperation between the customer and LINAK. LINAK provides the relevant support, competence and documentation needed for the customer's overall development plan and test plan for the specific application.

The driver of the qualification process is the customer who has the ultimate application responsibility (MDS). The customer identifies and specifies the needed testing based on many different parameters (experience, risk management, requirements from standards, etc.).

In many cases, the customer is establishing and verifying tests early in the project to ensure that the approval process has a low risk of failing when tested in the approval institute.

The customer identifies which tests to make and when they are to be performed in the project to mitigate the risk of failure in the approval process which also includes EMC testing.

Electrostatic discharge (ESD)

LINAK® considers ESD to be an important issue and years of experience have shown that equipment designed to meet the levels specified in standards might be insufficient to protect electronic equipment in certain enviroments.

1. Handling and mounting electrostatic discharge sensitive devices (ESDS devices).

- Handling of sensitive components shall only take place in an ESD Protected Area (EPA) under protected and controlled conditions.
- Wrist straps and/or conductive footwear (personal grounding) shall always be used when handling ESDS devices.
- Sensitive devices shall be protected outside the EPA by the use of ESD protective packaging.

2. Responsibility LINAK/customer

- ESDS devices must under no circumstances, during transport, storage, handling, production or mounting in an application, be exposed to harmfull ESD.
- LINAK can only guarantee the lifetime of ESDS devices if they are handled in the same way from production at LINAK A/S until they are mounted in the manufacturer's application. It is therefore important that the ESDS devices are not removed from the ESD protected packaging before they are physically within the EPA area at the customer premises.

Please refer to EN61340 for further information:

EN61340-5-1, Electrostatics - Protection of electronic devices from electrostatic phenomena - General requirements

EN61340-5-2, Electrostatics - Protection of electronic devices from electrostatic phenomena - User guide

RF transmitter/receiver properties

Some LINAK products emit RF-power by intention for communication purposes.

Frequency band of transmission: 2402 MHz - 2480 MHz

Type: Bluetooth® Low Energy

Modulation: GFSK

Maximum Effective Radiated Power (ERP): 10 dBm

FCC and IC Statements

For RF-emitting products (e.g. Bluetooth®, Wi-Fi) intended to be used on the North American continent, the following applies:

FCC statement

NOTE: This equipment has been tested and found to comply with the limits for a Class B digital device, pursuant to part 15 of the FCC Rules. These limits are designed to provide reasonable protection against harmful interference in a residential installation. This equipment generates uses and can radiate radio frequency energy and, if not installed and used in accordance with the instructions, may cause harmful interference to radio communications. However, there is no guarantee that interference will not occur in a particular installation. If this equipment does cause harmful interference to radio or television reception, which can be determined by turning the equipment off and on, the user is encouraged to try to correct the interference by one or more of the following measures:

- Reorient or relocate the receiving antenna.
- Increase the separation between the equipment and receiver.
- Connect the equipment into an outlet on a circuit different from that to which the receiver is connected.
- Consult the dealer or an experienced radio/TV technician for help

Changes or modifications not expressly approved by the party responsible for compliance could void the user's authority to operate the equipment.

This device complies with Part 15 of the FCC Rules. Operation is subject to the following two conditions:

(1) this device may not cause harmful interference, and

(2) this device must accept any interference received, including interference that may cause undesired operation.

FCC RF Exposure Warning Statement:

This equipment complies with FCC radiation exposure limits set forth for an uncontrolled environment. This equipment shall be installed and operated with a minimum distance of 20 cm between the radiator and body.

IC statement

This device contains licence-exempt transmitter(s)/receiver(s) that comply with Innovation, Science and Economic Development Canada's licence-exempt RSS(s). Operation is subject to the following two conditions:

(1) This device may not cause interference.

(2) This device must accept any interference, including interference that may cause undesired operation of the device.

ISED Radio Frequency Exposure Statement:

This equipment complies with ISED exposure limits set forth for an uncontrolled environment. This equipment shall be installed and operated with a minimum distance of 20 cm between the radiator and body.

L'émetteur/récepteur exempt de licence contenu dans le présent appareil est conforme aux CNR d'Innovation, Sciences et Développement économique Canada applicables aux appareils radio exempts de licence. L'exploitation est autorisée aux deux conditions suivantes :

(1) L' appareil ne doit pas produire de brouillage;

(2) L' appareil doit accepter tout brouillage radioélectrique subi, même si le brouillage est susceptible d' en compromettre le fonctionnement.

Déclaration d'ISDE sur l'exposition aux radiofréquences:

Cet équipement est conforme aux limites d'exposition d'ISDE établies pour un environnement non contrôlé. Cet équipement doit être installé et utilisé à une distance minimale de 20 cm entre le radiateur et le corps.

Symbols

The following symbols are used on the LINAK product labels, where applicable:

	IEC 60417-5172: Class II equipment		Compliance to all relevant EC directives
	IEC 60417-5840: Applied part type B		UK Conformity Assessment
	IEC 60417-5019: Class I equipment Protective earth; protective ground		Regulatory compliance mark: The Australian Safety/EMC Regulations
	IEC 60417-5002: Positioning of cell		Alternating current
	ISO 7000-0434A: Caution, consult accompanying document		Direct current
	ISO 7000-1641 Operating instructions		Reduced ETL recognised component mark for Canada and the United States. X: The mark is always accompanied by a control number of 6 or 7 figures. For complete description, see ETL marking on next page.
	Electronics scrap		
	Electronics scrap		Bluetooth®
Li-ion	Recycle		Japanese TELEC
c US	Recognised Component mark for Canada and the United States		
PS E	PSE diamond mark		
PS E	PSE circle mark		

Electrical Testing Laboratories (ETL) marking

Due to space limitations, the complete ETL marking demands are not represented on the marking plates.

The full ETL recognised component markings are shown here:

C/N 120690
Conforms to ANSI/AAMI Std. ES60601-1
Cert. to CSA Std. C22.2 No. 60601-1

C/N 4008004
Conforms to ANSI/AAMI Std. ES60601-1
Cert. to CSA Std. C22.2 No. 60601-1

C/N 4008838
Conforms to ANSI/AAMI Std. ES60601-1
Cert. to CSA Std. C22.2 No. 60601-1

C/N 9901916
Conforms to ANSI/AAMI Std. ES60601-1
Cert. to CSA Std. C22.2 No. 60601-1

C/N 4008005
Conforms to ANSI/AAMI Std. ES60601-1
Cert. to CSA Std. C22.2 No. 60601-1

C/N 4008671
Conforms to ANSI/AAMI Std. ES60601-1
Cert. to CSA Std. C22.2 No. 60601-1

C/N 4008003
Conforms to ANSI/AAMI Std. ES60601-1
Cert. to CSA Std. C22.2 No. 60601-1

C/N 4008623
Conforms to ANSI/AAMI Std. ES60601-1
Cert. to CSA Std. C22.2 No. 60601-1

C/N 4009507
Conforms to ANSI/AAMI Std. ES60601-1
Cert. to CSA Std. C22.2 No. 60601-1

Batteries

To comply with the EU Battery Regulation (EU) 2023/1542, battery-related information is provided through this QR code.

Scanning the QR code gives access to battery identification details, as well as safety and environmental information available on the LINAK website.

This information must also be included in the end-product user manual.

General battery warnings

Handle batteries carefully. Do not short circuit the battery.

Avoid continuous battery discharge when the medical device is not in use, as this may cause lead sulphate formation, which, if left in this state for too long, will irreversibly damage the battery.

LINAK battery packs may emit flammable gases. Do not expose the battery packs to fire or equipment that emits sparks. Moreover, do not store the battery in a closed environment or incorporate it into a closed structure of an enclosure as this may cause an explosion, fire, equipment damage, or injury.

Handle tools carefully and do not wear jewelery when handling batteries. A short-circuit of the battery terminals can cause burn injuries, damage or trigger explosions.

Only connect LINAK batteries to compatible chargers.

LINAK battery packs contain toxic substances. If the internal battery fluid leaks out and gets onto skin or clothing, make sure it is washed off with clean water. Moreover, if the fluid gets into the eyes, rinse them immediately with clean water and seek medical assistance.

Do not use or store LINAK battery packs in places where the ambient temperature exceeds 50 °C, such as inside a hot automobile, in direct sunlight, or in front of a stove or a source of intense heat. Doing so can shorten the battery life, lower its performance level, cause the battery to leak fluid, explode, cause fire, or be damaged.

Applications where batteries serve as backup and not as the main power source should always be connected to mains whenever possible.

Lithium ion batteries

Li-Ion batteries are moving in the direction of minimising the physical size and, at the same time, increasing the capacity. This gives a very compact battery with a high energy concentration. It also increases the risk of thermal runaway (see note below) due to internal short circuits.

The general use of Li-Ion batteries has increased, and the inherent risk of thermal runaway has led to stricter rules within the transport industry, specifically air transport with tightened restrictions on the quantity, handling, and storage of specific products.

The OEMs and consumers must recognise that although safe to use, Li-Ion cells always have a very small risk of thermal runaway. The risk could be as little as 1 PPM or even less.

LINAK currently bases our Li-Ion battery design on cell types with an industry-proven history (e.g. electric cars). The use of well-proven cell technology reduces the risk of thermal runaway, but it does not eliminate it. LINAK has completed activities to reduce this risk and the complete battery package is approved in accordance with UL.

An external, internationally recognised expert has also reviewed the design to ensure that it is manufactured according to the latest recommendations. Further to that, we only use cells from well-recognised manufacturers.

LINAK recommends that when using Li-Ion batteries, the customers should carry out proper risk analysis on their application. The risk analysis must also take into consideration that these products are not mounted in positions where they are in direct contact with flammable materials.

LINAK Li-Ion batteries have no greater risk of thermal runaway than other Li-Ion cells from well-recognised manufacturers within the market. Therefore, LINAK cannot take responsibility for any failures that occur due to a failure that is inherent in the nature of Li-Ion batteries.

If any of the Li-Ion batteries built into LINAK products are found to be defective under warranty, LINAK will provide the OEM with a new product. LINAK explicitly disclaims all other remedies. LINAK shall not in any event be liable under any circumstances for any special indirect punitive incidental or consequential damages or losses arising from any incident related to the inherent risk of thermal runaway in the Li-Ion cell and any use of LINAK products. Moreover, LINAK explicitly disclaims any responsibility for profit loss, failure to realise expected savings, any claim against our customer by a third party, or any other commercial or economic losses of any kind, even if LINAK has been advised of the possibility of such damages or losses.

Note: ‘Thermal runaway’ is overheating of a cell, and it could lead to a small fire and smoke from the cell.

Transportation

The lithium ion batteries must be packed and transported in accordance with applicable regulations. Always ask your local transportation provider how to handle the transportation of lithium ion batteries.

Please see the general assembly instructions and the mounting section for detailed information.

Warnings

When using Li-Ion batteries with patient lift control boxes, loss of power might happen due to the battery deep discharge protection. This will only happen in case of continuous battery use despite warnings. In this event, there may be no warning, and the application may not be able to move when expected.

In his risk analysis, the customer must take into consideration how to assure alternative means to make movement, for instance quick release or manual lowering.

Do not open the battery housing as damaging the cell or circuitry may develop excessive heat.

If product caution is not clearly visible at low light intensity, read the product label instructions symbol. A warning must be included in the application manufacturer manual for the medical device.

The application manufacturer must test the application and ensure that intentional and unintended operations do not exceed the battery specification limits.

Defective or damaged Li-Ion batteries are not allowed for transportation.

For safety reasons, please adhere to the indicated charging and operation temperature.

In case the battery is too hot, disconnect it, evacuate the room, and wait for 2 hours before taking further steps.

Mounting instructions must be followed in order to avoid exposing batteries to water.

In general, recharging of batteries must take place every 12 months. However, please note:

- New Li-Ion batteries, shipped from LINAK are in a deep-sleep state, where the self-discharge is very little
- When mounted in an application, LINAK Li-Ion batteries wake up, resulting in a higher rate of charge, depending on the application/system
- Application manufacturer must consider this idle consumption for his specific system and make precautions to avoid discharged batteries.
- Contact your LINAK sales team for further information

If batteries are to be shipped by air, they shall not be charged to more than 30%

Disposal of the battery takes place in accordance with local regulations.

Recommendations

- Do not exceed the storage temperature as it will shorten the product life and performance.
- Allow the battery to settle to room temperature before use.
- Lithium ion batteries are not intended for use in outdoor applications and indoor pool environments.
- If the battery is completely discharged, then recharge the battery before storage.
- Always use correct LINAK charger

DO NOT:

- Heat or burn the batteries.
- Expose the batteries to high impact/excessive force.
- Crush or puncture the batteries.
- Use batteries with signs of damage or corrosion.
- Charge or store the batteries near combustible material.
- Exceed IP-ratings.
- Overcharge or fully discharge the batteries.

Safety feature

Lithium ion batteries contain several mechanisms to protect themselves from being damaged due to excessive use. In case of overheating, the device will activate a thermal protection. No power output will be available until the temperature is again within normal operating range.

Overheating may occur by extensive use at high temperatures or when exceeding the duty cycle (see product label).

Lead acid batteries

Maintenance of batteries

Prior to first use of LINAK® batteries, please make sure that they are charged at least 24 hours and if possible even longer for proper functioning and prolonging the battery lifetime.

Replacement of batteries

The batteries must only be replaced by the same type of batteries or mechanical and electrical equivalent types. The batteries must be new or maintained by means of charging at least every 6 months. The batteries, which make a set, must be supplied with identical production codes.

Production code mismatch may lead to a severely reduced lifetime expectancy.

Before mounting, ensure that the battery set is correctly connected, compare with the drawing in the battery room and check that no connectors are loose.

Warnings in connection with battery replacement

Please observe the following maintenance, replacement, and disposal requirements to ensure a safe and reliable operation.

The batteries are to be replaced after 4 years at the latest. Perhaps earlier, depending on the pattern of use. Frequent and high-powered discharges reduce the battery life. For an optimum lifetime, the product must be connected to the mains voltage as often as possible. It is recommended that the batteries are to be charged for at least every 6 months - otherwise the batteries will have reduced capacity due to self-discharge. It is recommended to test the battery function at least once every year.

The battery compartment is hermetically separated from the electronics compartment. When replacing the batteries this separation must not be damaged or modified as this may allow penetration of battery gas into the electronics compartment with risk of explosion.

When replacing batteries in waterproof products (IPX5 and IPX6), precautions must be taken that the sealing material (silicone ring or joint filler) is not damaged and that it is correctly placed in the groove. Hereafter, the screws in the cover are to be fastened with approx. 1 Nm.
If necessary, replacement sealing is available at LINAK.

The battery compartment is supplied with ventilation that ensures correct and necessary airing of the battery compartment. This airing must not be blocked or covered as a positive pressure may occur with risk of explosion.

If the product has been exposed to mechanical overload (lost on the floor, collision/squeezing in the application or a powerful stroke), the product must be sent to an authorised workshop for control of the hermetic separation between the battery and electronics compartment.

Disposal

Lead acid batteries must be disposed of in the same way as car batteries. Alternatively, they may be returned to LINAK.

System description

LINAK® actuators, lifting columns and electronics have been developed for use in all places where a linear movement is required.

LINAK products can for example be used for:

- Adjustment of beds
- Patient lifts within the care and hospital sector
- Adjustment of dentist chairs/gynaecological chairs

Connecting the system

Do not connect the battery until all actuators and hand control have been connected to the JUMBO system.

Start by connecting the hand control to the control box. The connection in the control box is marked with "HB".

Connect the different actuators to the different channels on the control box. Each channel is marked with a number (e.g. "1", "2", "3".....).

Check that all plugs are well connected and firmly pushed into the connector. Due to the fact that LINAK® control boxes are designed for a high IP degree, a firm force can be required.

Connect the battery.

The actuators can now be operated by pressing a button on the hand control.

LINAK JUMBO system

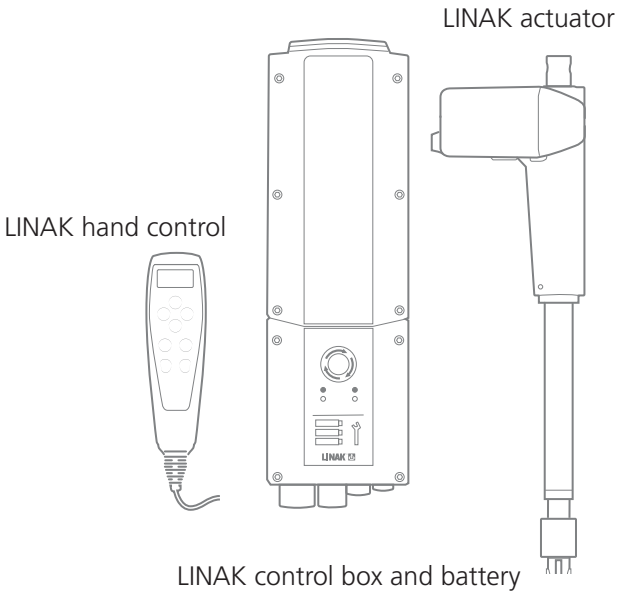

To disconnect the system, press the emergency button.

Charging is only allowed in dry environment, and the appliance inlet must be thoroughly dried before connecting to mains.

General environmental conditions

Operating, storage and transport	
Operating temperature Relative humidity Atmospheric pressure	+5 °C to +40 °C 20% to 80% - non-condensing 700 to 1060 hPa (Rated to be operated at an altitude ≤ 3000 m)
Storage temperature Relative humidity Atmospheric pressure	-10 °C to +50 °C 20% to 80% - non-condensing 700 to 1060 hPa (Rated to be stored at an altitude ≤ 3000 m)
Transport temperature Relative humidity Atmospheric pressure	-10 °C to +50 °C 20% to 80% - non-condensing 700 to 1060 hPa (Rated to be transported at an altitude ≤ 3000 m)
These values apply unless specified otherwise in the product-related texts.	

Information on start-up, deinstallation and operation

Before installation, deinstallation or troubleshooting

- Stop the actuator/lifting column.
- Switch off the power supply or pull out the mains plug and pull out the plug to the actuator/lifting column.
- Relieve the actuator/lifting column of any loads, which may be released during the work.

Before start-up

- Make sure that the system has been installed as instructed in the relevant product manual.
- The individual parts (actuator/lifting column/hand controls etc.) must be connected before the control box is connected to the mains.
- Make sure that the mains voltage to be connected to the product or the system is the one stated on the label.
- The equipment can be moved freely over the whole working area of the actuator/lifting column.
- Check correct function after mounting.
- The actuator/lifting column must not be loaded in excess of the values indicated in the specifications on the product label.
- The duty cycle noted on the product label must always be observed. Otherwise there is a risk of product damage. Exceeding the duty cycle will result in a dramatic reduction of the system lifetime.
- Unless specified otherwise on the product label, the duty cycle is max. 10%, max. 2 minutes in use followed by 18 minutes not in use.
- The actuator/lifting column system may only be used in an environment corresponding to the IP rating of the system. LINAK products are marked with the actual IP rating on the label.
- If the actuator is assembled in the application and is exposed to push or pull during transportation, the actuator can be damaged.
- If any individual parts are suspected to be damaged, do not install the parts, but return them for inspection/service.

During operation

- Check for unusual sounds and irregular movement. Stop the actuator/lifting column immediately if anything unusual is observed.
- If the control box makes unusual noises or smells, switch off the mains voltage immediately and the external battery, if any.
- Take care that the cables are not damaged.
- Unplug the mains cable on mobile equipment before it is moved.

Cleaning

The products can be cleaned as described in the following according to their IP protection stated on the product label.

The IP code specifies the protection degree provided by the enclosures. For most products, only the protection against ingress of water (second characteristic numeral) is specified, ingress of solid foreign objects or dust (first characteristic numeral) is not specified and therefore replaced by the letter X in the code. However, it should be noted that compliance with the requirements of IEC 60601-1 automatically allows to rate the medical equipment as IP2X because the requirements of IEC 60529 for this rating are the same as the accessibility requirements.

IP protection	Cleaning instructions
IPX0	Clean with a damp cloth
IPX1	Clean with a damp cloth
IPX2	Clean with a damp cloth
IPX3	Clean with a damp cloth
IPX4	Clean with a damp cloth
IPX5	Wash with a brush and water, but not water under pressure
IPX6	Wash with a brush and water. The water can be under pressure, but the system must not be cleaned directly with a high pressure cleaner. Max. 20 °C
IPX6 Washable according to IEC 60601-2-52	Clean by the use of wash tunnels according to IEC 60601-2-52
IPX6 Washable DURA™	Clean by the use of wash tunnels according to IEC 60601-2-52, extended washing cycle test

To avoid degreasing of the piston rod, the actuator should be retracted to minimum stroke and without load before washing.

Cleaning warnings

The systems must not be sprayed directly with a high pressure cleaner.

Interconnecting cables must remain plugged in during cleaning to prevent water ingress.

Cleaning with a steam cleaner is not permitted

UV cleaning is not permitted.

Rinsing aids

LINAK® recommends the following products:

- Sekumatic FKN from Ecolab
- Neodisher BP or TN from Dr. Weigert
- Thermosept BSK from Schülke or similar with a pH-value of 5 - 8 and in a concentration of 0.2 %.

Demands to chemicals:

- They must not contain caustic solutions
- They must not change the surface structure or adhesive properties of the plastic
- Must not break down grease

LINAK washing profile according to IEC 60601-2-52

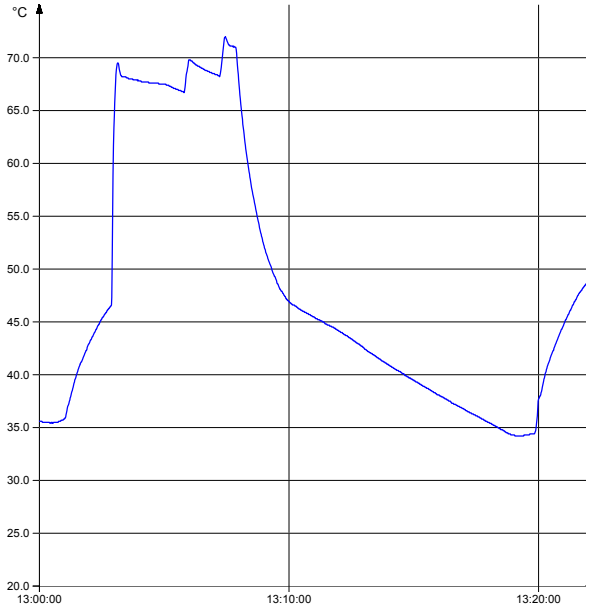

LINAK washing machine



IPX6 Washable DURA™

Description of washing test

LINAK washable products frequently go through a fully controlled washing test. The LINAK term "IPX6 Washable DURA" signifies that the products conform exclusively to this test.

The "IPX6 Washable DURA" washing test is used to ensure that products that are rated "IPX6 Washable DURA" comply with the agreed terms and conditions. This washing test differs from the norm EN60601-2-52 as the products are not aged and each washing cycle is followed by a 30 minute cooling process.

Further information regarding the washing process can be found in the German document "Maschinelle Dekontamination" from the organisation AK-BWA.

Estimated time consumption: Approximately 1 month.

Amount of samples: During the development process, the number of tested samples is in accordance with GP082. During running production, the number of tested samples complies with UM-41-22-001.

General: The process applies to the IPX6 Washable DURA system.

Test conditions:

- The units are not aged.
- Products with adhesive foils must be hardened before ageing.
- The hardening time depends on the used adhesive, but is typically 3 days at 20°C.
- The units are washed with new plugs/cables.
- The cables should be as long as possible and free ends should be shut off.
- Detergent and rinsing aids used:
  - Detergent 1: DR. WEIGERT neodisher Dekonta AF
  - Rinsing aid 1: DR. WEIGERT neodisher TN

Test procedure:

- The units are placed in the washing machine in the intended mounting direction (in the most sensible direction regarding water penetration, if this is not the same direction).
- The washing process (see picture below) is repeated 11 times and consists of:
  - Washing with 0.3 % alkaline detergent for 2 minutes in 70 °C hot water. (Note: the temperature is measured in the tank, not necessarily at the unit).
  - Rinsing with neutral rinsing aid for 20 seconds.
  - Drying and cooling for 30 minutes in the open air at approx. 20 °C.
- After 11 cycles, the products are left in a ventilated room for 24 hours. The above steps are repeated until a total of 250 cycles has been reached.
- Immediately after washing and after further 24 hours, the products are subjected to a high voltage test in accordance with UM-31-30-072.
- A population sample of the products is opened for water penetration control immediately after the washing test.
  Accept criteria are in accordance with UM-20-30-002.

Options: The following options can be used for the test:

- The units may be weighed prior to and after the washing test to detect water.
- The bubble test may be used to detect any leakages.
- X-ray may be used to detect any leakages.

LINAK washing profile for the “IPX6 Washable DURA” process

LINAK washing profile according to DURA™

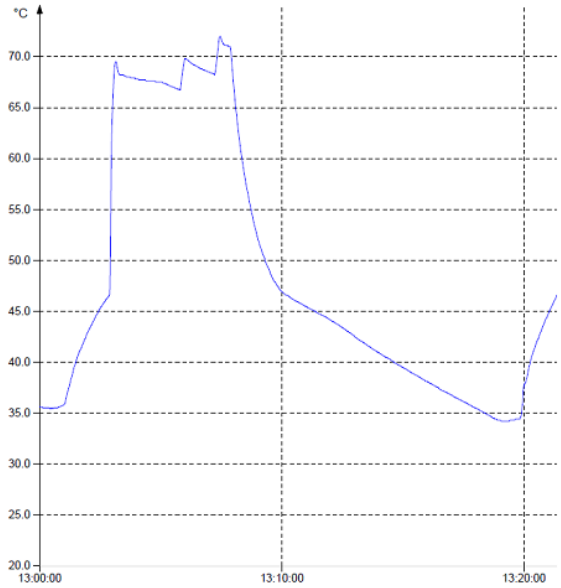

(Note: The temperature is measured at the unit)

LINAK washing machine



Cable wash

Before the washing procedure starts

In order to maintain the flexibility of the cables, it is important that the cable is placed in such a way that the cable’s own weight does not strain the coil during the washing process. This can be done by placing the cable ON the bed or another form of support for the cable. Please see the examples in the picture to the right.

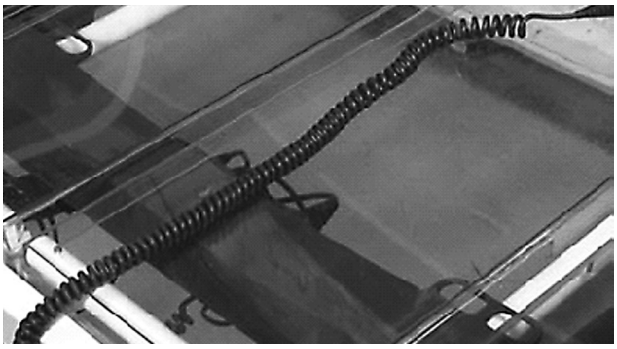

General maintenance

If not otherwise stated in the specific product section.

- LINAK products must be cleaned at regular intervals
- Frequent inspection for malfunction, mechanical damage, wear and cracks. Worn-out parts must be replaced
- Inspection/maintenance intervals are to be recommended by the medical device manufacturer
- LINAK products are closed units and require no internal maintenance
- LINAK products must be IPX6 Washable and IPX6 Washable DURA when cleaning in wash tunnels
- O-rings: When individual parts are replaced in a LINAK IPX6, IPX6 Washable or IPX6 Washable DURA system, the O-rings must be replaced at the same time on all parts. On all products where replaceable cables or fuses have been dismounted or replaced, the O-ring must be replaced, and the O-rings and the receptacle insert must be greased with an acid-free Vaseline.

Repair and disposal

Only an authorised LINAK® service centre should repair the LINAK actuator systems. Systems to be repaired under warranty must be sent to an authorised LINAK service centre.

In order to avoid the risk of malfunction, all actuator repairs must only be carried out by an authorised LINAK Service shop or repairers, as special tools and parts must be used.

If a system is opened by unauthorised personel there is a risk that it may malfunction at a later date.

LINAK systems or components may be disposed of, possibly by dividing them into different waste groups for recycling or combustion.

We recommend that our product is disassembled as much as possible at the disposal and that you try to recycle it. LINAK systems or components should be disposed of in accordance with the environmental regulations applicable in the respective country.

Troubleshooting

Symptom	Possible cause	Action
No motor sound or movement of piston rod	- The actuator is not connnected to the control box - Blown fuse in the control box - Cable damaged	- Connect the actuator to the control box - Fuse must be changed - Send actuator for repair
Excessive electricity consumption		- Send actuator for repair
Motor runs but spindle does not move	- Gear wheel or spindle damaged	- Send actuator for repair
Actuator cannot lift full load	- Clutch is worn - Motor is damaged	- Send actuator for repair
Motor sound but no movement of piston rod		- Send actuator for repair
No signal from Reed or Hall switch		- Send actuator for repair
Motor runs and quick release does not function or is noisy	- Declutching arm turns less than approx. 75 °C	- Adjust cable
Piston rod will only move inwards and not outwards	- Safety nut has operated	- Send actuator for repair
	- Not connected to mains	- Connect to mains
Power indicator does not light up	- The fuse has blown	- Replace fuse, if the system is prepared for external fuse replacement, or send the system for repair
	- Defective power cable	- On control boxes with exchangeable power cable, change the cable. - On control boxes with fixed cable, send it for repair
	- Control box defective	- Send control box for repair
	- Actuator plug not pushed into control box properly	- Push actuator plug properly into control box
Power indicator lights up, but actuator does not run	- Actuator defective	- Replace actuator - Defective control box - Replace the control box
Control box relays are clicking	- Control box defective	- Send control box for repair
Power indicator lights up, but actuator does not run	- Hand control defective	- Send hand control for repair
No relay noise is heard from control box Not valid for CB20/CB6S OBF/CB16 OBF	- Battery completely flat	- Charge battery
Control box completely dead on battery and no relay clicking	- Battery defective	- Replace battery
	- Actuator plug not properly pushed into control box	- Push actuator plug properly into control box
Actuator does not run on battery, but relay clicking can be heard	- Actuator defective	- Replace actuator
	- Control box defective	- Replace control box
	- Hand control defective	- Send hand control for repair
	- Control box defective	- Send control box for repair
Control box okay apart from one direction on one channel		

BAJ



The lead acid battery BAJ can be used with the JUMBO system for patient lifts. The efficient battery offers easy attachment to the control box via integrated snap functionality, facilitating the handling in daily use.

Usage

BAJ is a part of the JUMBO system. It is compatible with CBJ2, CHJ2, CBJC and COBO.

Duty cycle:	10% or 2 min. continuous use then 18 min. not in use
Ambient temperature:	+5° to +40° C
Storage temperature:	-15° to +40° C
Relative humidity:	20% to 80% - non-condensing
Atmospheric pressure:	700 to 1060 hPa
Height above sea level:	Max. 3000 meters
Flammability rating:	UL94-V0
Approvals:	IEC60601-1
	ANSI/AAMI ES60601
	CAN/CSA-22.2 No 60601-1

Charging

BAJ can be charged by

- Charger CHJ2
- Control box CBJ2, CBJC, COBO

BAJ with integrated DC plug can also be charged by use of the external charger CH01

Warnings

- Check at regular intervals that the ventilation hole is undamaged and intact.
  The construction of the ventilation stub permits battery gasses to get out, but it does not permit penetration of water.

BAJL



The Li-Ion battery pack BAJL has been specially developed for use with the JUMBO system for patient lifts and sit-to-stand lifts. It is a leightweight battery with reliable and high performance.

Usage

Compatibility:	CBJC, CBJ2, COBO, CHJ2 and CH01
Duty cycle:	5%, 1 minute continuous use folowed by 19 minutes not in use 10 % 2 minutes continuous use followed by 18 minutes not in use (for type 1, 3.3 Ah, type 2 6.6 Ah)
Charging:	Via JUMBO wall charger CHJ2 or via JUMBO control box with integrated charger
Charging time:	3 to 4 hours
Charging state:	Maximum 30% when shipped from LINAK
Recharging during storage:	Recharge the battery 6 months at the latest after production date stated on the label
Operating temperature:	+5 °C to +40 °C
Charging temperature:	+10 °C to +40 °C
Storage temperature:	-10 °C to +40 °C (+10 °C to +25 °C - recommended) The batteries must be stored in an applicable storage room without direct sunlight
Relative humidity:	20% to 80% - non-condensing
Atmospheric pressure:	700 hPa to 1060 hPa
Height above sea level:	Max. 3000 meters
Approvals:	IEC60601-1:2005 3rd edition, ANSI / AAMI ES60601-1:2005, 3rd edition, CAN / CSA-22.2 No 60601-1:2008, IEC62133 2nd edition, UL2054, 2nd edition PSE (pending) UN38.3, 6th edition (needed for transportation of lithium batteries)

Mounting

Do not mount the battery upside down.

Please follow the mounting instructions of the control box e.g. CBJC or COBO.

Standby mode

When the BAJL is not being used for a longer period - more than a week - or when it is on stock, it enters into a standby mode to save power and protect the battery from deep discharge.

- Please connect the charger for approx. 15 seconds to exit the standby mode before use.
- There is no audio signal to indicate the standby mode or to indicate exit of standby mode.

After exit of the standby mode

If there is still no power on, the battery needs to be charged. After charging, the hand control and/or the control box will indicate the battery capacity level again.

Deep discharge protection

The BAJL has a deep discharge protection to extend the battery life.

The deep discharge protection is activated when the battery is discharged.

- Please connect the charger for approx. 15 seconds to exit the deep discharge mode before use.

If the battery is completely discharged, the charging will be started at a very small rate to protect the battery. This small charging rate is not sufficient to turn on the light in the charger, and therefore the user may believe that the system has not yet started.

Depending on the battery state, it may take several hours to get to the normal charging state. The orange light of the control box will not be turned on as the operation is analogue. It is therefore not possible to see that the charging has started, however, only at a low level.

If any and all of the lithium ion batteries built into LINAK products are found to be defective under warranty, LINAK will provide a new product to the OEM. LINAK explicitly disclaims all other remedies. LINAK shall not in any event be liable under any circumstances for any special indirect punitive incidental or consequential damages or losses arising from any incident related to the inherent risk of thermal runaway in the lithium ion cell and any use of LINAK products. Moreover, LINAK explicitly disclaims lost profits, failure to realise expected savings, any claim against our customer by a third party, or any other commercial or economic losses of any kind, even if LINAK has been advised of the possibility of such damages or losses.

Transportation

The lithium ion batteries must be packed and transported according to applicable regulations. Always ask your local transportation provider how to handle the transportation of lithium ion batteries.

Lithium ion batteries that are considered defective for safety reasons have been damaged or have the potential of producing excessive heat or fire are not allowed for air transportation and must be disposed of locally.

Recommendations

- Charge the battery fully before first use.
- Adhere to the battery storage temperature or else the lifetime and performance will be reduced.
- Allow the battery to settle to room temperature before use or charging.
- Only use correct LINAK charger (CHJ2, CH01, integrated charger in JUMBO control box or COBO).
- Adhere to the duty cycle or else the lifetime and performance will be reduced.
- BAJL is intended for use in indoor applications, however not in indoor pool environments.
- Recharge the battery before storage if it has been completely discharged.
- Unintentional use of the emergency button, for instance short activation and deactivation of the emergency button after operating the actuators, can lead to an error indication of remaining battery capacity. The battery capacity will however be shown correctly approx. 20 seconds after activation of the emergency button.
- The BAJL goes into sleep mode approximately 20 seconds after the CBJC enters into sleep mode. If the CBJC is reactivated within this period, it can lead to a wrong remaining battery capacity indication. The remaining battery capacity will, however, be shown correctly approx. 20 seconds after the reactivation of the CBJC.

Safety feature

BAJL contains several mechanisms to protect itself from being damaged due to excessive use.

In case of overheating, the device will activate a thermal protection. No power output will be available until the temperature has returned to normal operating range.

Overheating may occur by extensive use at high temperature or by exceeding the duty cycle.

Battery safety

LINAK li-ion batteries for medical use are designed and manufactured to be safe through the product lifetime. LINAK has performed various tests of the batteries in normal use, abuse situations and failure situations to verify the design and production methods. These tests have not shown any unacceptable risks.

The batteries are also UL-tested to have an independent organisation verify the safety of the design and to obtain a safety certificate. This means that UL regularly inspects the factory to check that standards are complied with.

UL has tested in accordance with the following standards:

UN38.3, 6th edition - Battery Transportation Safety

IEC62133 Battery Safety

UL2054, 2nd edition - Standard for Household and Commercial Batteries

Warnings

ALL LI-ION BATTERY USERS MUST READ THESE IMPORTANT BATTERY SAFETY INSTRUCTIONS AND WARNINGS BEFORE USING LI-ION BATTERIES.

Failure to read and follow these safety instructions and warnings may result in fire, personal injury, and equipment damage if the batteries are charged and/or used improperly.

Lithium ion batteries differ from the lead acid technology as they have a built-in deep discharge protection.

- In case of continuous use despite warnings, a power loss might occur due to the battery deep discharge protection. In this event, there may be no warning and the application may not be able to move when expected.
- The combination of CBJ2 with BAJL might not be able to complete a full cycle after the low battery audio signal.
- The risk analysis for the final application must allow for the ensurance of alternative means to make movement, for instance quick release or manual lowering.
- Do not open, disassemble or modify the battery housing as cell or circuitry damage may develop excessive heat.
- Discontinue the battery use immediately if the battery emits an unusual smell, feels hot, changes colour or shape, shows signs of damage or corrosion or appears abnormal in any other way.
- In case the battery turns hot, disconnect and remove the battery from the room. If not possible to remove the battery, then evacuate the room.
- Defective or damaged lithium ion batteries or batteries that produce excessive heat or fire are not allowed for transportation.
- For safety reasons, please adhere to the indicated charging, storage, and operation temperature as extreme temperatures (low or high) might ignite the batteries and cause fire.
- The mounting instructions must be followed in order to avoid exposing batteries to water.
- The customer is responsible for determining that charger and host device work properly.
- Recharge batteries every 6 months at a minimum.
- Dispose of batteries in accordance with local regulations.

DO NOT:

- heat, burn or short circuit the batteries
- expose the batteries to high impact
- crush or puncture the batteries
- charge or store the batteries near combustible material
- charge the batteries without supervision
- expose the batteries to water or other liquids

Any of the above mentioned can cause fire or injury.

LINAK® will remedy defective Li-Ion batteries built into LINAK products in accordance with the terms stipulated in the LINAK Li-Ion battery disclaimer available on the LINAK website. LINAK explicitly disclaims all other remedies and liability.

Information

Please be aware that BAJL is not compatible with:

- CBJ2 – incl. pool lift versions

CBJ2



The control box CBJ2 is part of the battery-driven modular JUMBO system which consists of a control box (CBJ2), a battery either based on lead acid or Li-Ion technology (BAJ/BAJL). Together with a charger (CHJ2), JUMBO is an ideal and flexible solution, specially developed for patient lifts.

Usage

CBJ2 with internal charger:	Nominal current draw max. 400 mA
	Power consumption (standby) max. 2.5 W
	Power consumption (charging) max. 19 W
Duty cycle:	max. 10% or 2 min.continuous use, followed by 18 min. without use
Ambient temperature:	+5° C to +40° C
Storage temperature:	-10° C to +50° C
Relative humidity:	20% to 80% - non-condensing
Height above sea level:	Max. 3000 meters

Mains supply grid should be limited to the highest prospective short circuit current of 35 A.

Demands to mains supply safety for the application in accordance with IEC 60601-1 ed. 3.2, § 8.11.5

Approvals:	IEC60601-1 ANSI/AAMI ES60601 CAN/CSA-22.2 No 60601-1

For one or two actuators (lift and leg spreader actuator)

Warnings

In order to avoid injury, the emergency-stop should be activated in (all) transport and cleaning situations.

CBJ2 Current cut-off

CBJ2	CH1		Leg spreader CH2	
	Min.	Max.	Min.	Max.
CBJ2002N	7	9	2	2.9
CBJ2003H	4.9	5.9	-	-
CBJ2004H	4.9	5.9	4.7	6.2
CBJ2005N	7	9	4.7	6.2
CBJ2006H	**9.8**	**11.8**	-	-
CBJ2007H	9.8	11.8	2	2.9
CBJ2008H	9.8	11.8	4.7	6.2

The minimum and maximum values stated above refer to the tolerance range, not the adjustment range.

The current cut-off tolerance is +/- 0.2 A depending on the ambient temperature (20 °C)

Warnings

To avoid injury, all control boxes with variable current cut-off are preset to < 4.5 A, unless otherwise specified.

When plugging a mono jack plug into channel 1, the current cut-off will be as the high speed table.

Recommendations

- The mains cable must always be ordered separately when ordering a CBJ2 with an internal charger.
- Use only original LINAK mains cables to ensure proper connection to internal charger.
- To reduce strain on mains cable, it is always recommended to use cable relief when mains is connected. Alternatively, use extension cable CAB0015579.
- The CBJ2 will not be able to operate any actuators when charging or connected to mains.
- By use of charger CH01 it is possible to activate the actuators when charging. However, this is not recommended as it can damage the control box or the charger CH01.
- When the CBJ2 with LCD display option is combined with the battery BAJL, the LCD display can indicate empty battery, even if the battery capacity is not low. The acoustic alarm will always be activated at low battery capacity independent of display indication.

Warnings

- In order to avoid injury, the emergency-stop should be activated in transport and cleaning situations.
- BAJL batteries differ from BAJ lead acid as they have built-in discharge protection. If the user continues to use the battery despite warning signals, loss of power might happen due to the battery deep discharge protection. In this event, there may be no warning and the application may not be able to move when expected.
- The combination of CBJ2 with BAJL might not be able to complete a full cycle after low battery warning.

Adjustment instructions for the JUMBO application

Tool	For the adjustment you must use a trimming screwdriver, which can be purchased from LINAK A/S. It is also possible to use other types of trimming screwdrivers for the adjustment. Ordinary screwdrivers cannot be used, as they will damage the potentiometer slot. When you receive the JUMBO from LINAK A/S it is adjusted to min. current cut-off.
1.	Connect the JUMBO control box to the actuator.
2.	Load the actuator with the required load.
3.	Turn the potentiometer completely clockwise.
4.	Run the actuator in the loaded direction at the same time turn the potentiometer anticlockwise until the actuator stops.
5.	Turn the potentiometer 3 times clockwise.
6.	Check JUMBO can lift the loaded actuator.
7.	Insert the plugs article no. 0009020 (light grey, RAL7035) or 0009019 (dark grey, RAL 7016) to ensure IP protection.

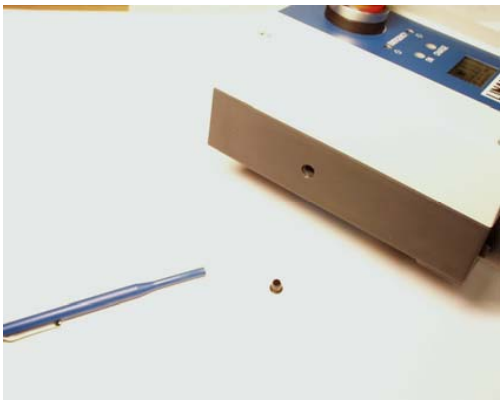



Only the end with the lowered notch must be used for adjustment of the potentiometer.

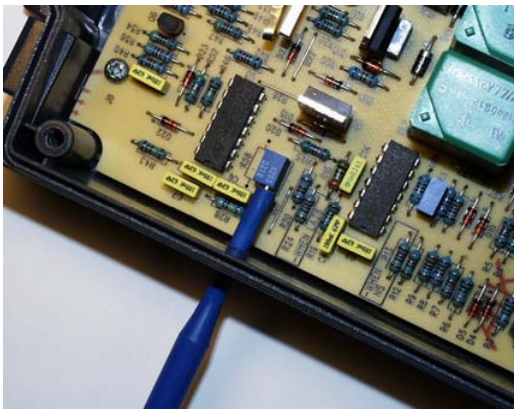

Mounting

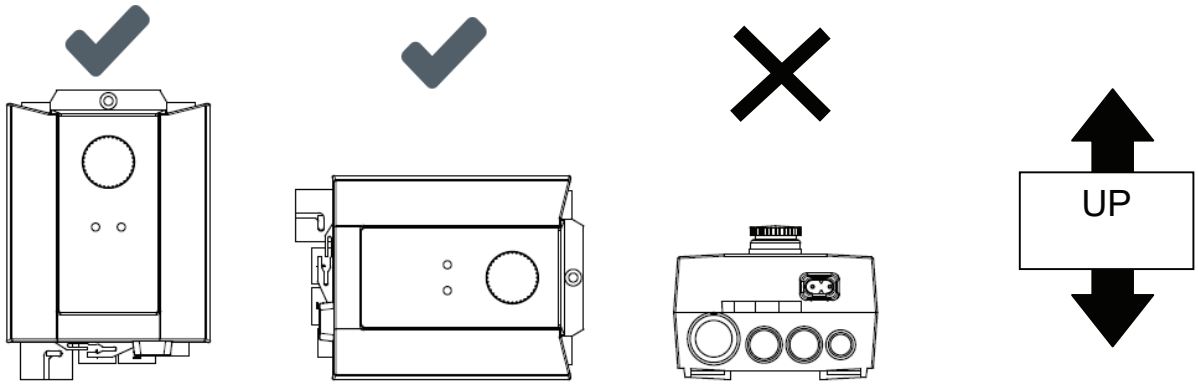

Warnings

Special care should be taken when mounting the CBJ2

As long as the the CBJ2 is mounted correctly, it complies with IPX5.

If the CBJ2 is mounted incorrectly, then water will gather around the screw holes resulting in non-compliance with IPX5!

CBJ2 with variable current cut-off: the protection plugs must always be inserted to ensure IP protection after adjustment.

When using the control box with emergency stop, the stop button must be activated in cleaning situations in order to comply with IPX5. The battery pack BAJ must not be removed in cleaning situations, doing so could result in non-compliance with IPX5.

If the CBJ2 is fitted with option B, D and F (DC power connector), the protection plug ex. 00918174 must always be inserted to ensure IP protection, if the port is not used. IP rating only applies when the battery is connected to the control box.

CBJ Care





The CBJ Care is an advanced control box for patient lifts, which is part of the battery-driven modular JUMBO system that consists of a control box (CBJC), a battery either based on lead acid or Li-Ion technology (BAJ/BAJL).

Usage

CBJC with internal charger:	Nominal current draw max. 400 mA
	Power consumption (standby) max. 2.5 W
	Power consumption (charging) max. 19 W
Duty cycle:	Max. 10% or 2 min. continuous use then 18 min. without use
Ambient temperature:	+5° to +40°
Storage temperature:	-10° C to +50° C
Relative humidity:	20% to 80% – non-condensing
Atmospheric pressure:	700 to 1060 hPa
Meters above sea level:	Max. 3000 meters

Mains supply grid should be limited to the highest prospective short circuit current of 35 A.

Demands to mains supply safety for the application in accordance with IEC 60601-1 ed. 3.2, § 8.11.5

Approvals:	IEC60601-1, IEC60601-1-6 ANSI / AAMI ES60601-1, CAN/CSA-22.2 No 60601-1

Instructions for use

- Before start-up we recommend to reset the service counters – days and cycles until next service visit. To reset press the up and down button on the control box or the hand control for 5 seconds. An audio signal will confirm the resetting.
- When charging, the CBJC will not be able to operate any actuators.
- It is not possible to use other battery types than BAJ or BAJL with the CBJC.
- Use only original LINAK mains cables to ensure proper connection to internal charger.
- The green battery indicator (100% to 50% capacity remaining) will light up during charging even though the battery is not fully charged. It is necessary to use the "CHARGE" LED to indicate whether or not the battery is fully charged (when using internal charger). The CHARGE indicator will light up during charging and turn off when the battery is fully charged.
- When resetting the CBJC or updating other settings than using learn mode, the CBJC must not be disconnected from the battery and the emergency stop must not be activated within a time span of at least 10 seconds. This is to ensure the correct storage of the new values to the memory banks of the CBJC.
- To reduce strain on mains cable, it is always recommended to use cable relief when mains is connected. Alternatively, use extension cable CAB0015579.

Recommendations

Hot Plugging

Removing or adding any OpenBus™ cables is not allowed when the control box is on power via mains supply or battery! If necessary anyway, follow the below procedure:

1. Remove mains or battery and wait 5 sec.
2. Mount or dismount the required cables

If this procedure is NOT followed it may result in a damaged OpenBus™ driver circuit.

The risk of a damaged circuit increases if the accessory has a high start current (in rush current).

Emergency lowering/lifting

By use of BAJ, the lifting arm can be lowered by pressing e.g. a pen in the hole or use the control buttons, if present. This is a permitted method of lowering/lifting.

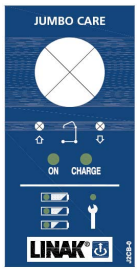

The emergency lowering/lifting "buttons" work as normal hand control buttons (you do not get extended functionality by using these when the battery is low).

By use of BAJL, please be aware that loss of power might happen due to the battery deep discharge protection. This will only happen by continuous use of the battery despite warning.

Warnings

In order to avoid injury, the emergency-stop should be activated in all shipping situations.

Functionality – JUMBO Care with display

Below you find information about what to read-out on the display version of JUMBO Care. Basically the functionality for the display version is the same as the LED version, but more information can be read out on the display.

Driving information

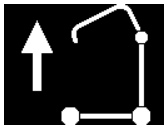

As long as a hand control button function is activated, driving information will be shown on the display. Either lifting arm up, lifting arm down, legs in or legs out or tilt of sling.

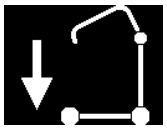

The only exception to this is when the battery is flat (stage 3 and 4). At that point the battery information will be shown instead.



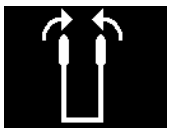



Battery information

The battery discharging will be shown in four stages:



Battery state 1: The battery is ok, no need for charging (100-50%).



Battery state 2: Battery needs charging. (50-25%)



Battery state 3: Battery needs charging. (Less than 25%) Buzzer sound is provided when a button is pressed in this battery state.

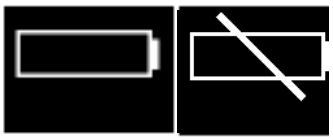

Battery state 4: (BAJ lead acid) The battery needs charging. At this stage some of the functionality of the lift is lost. At this battery stage, it is not possible to drive the lifting arm up or down. Furthermore, an audio signal will sound when a control button is activated (17V or lower). The symbol will switch between the two pictures for 10 seconds. The battery symbol is shown when the box is active until power down (2 minutes after use).



Battery state 4: (BAJ li-ion) When using CBJC with display together with a BAJL battery, the display will not show the "Battery state 4" symbol. The BAJL deep discharge protection overrules the "battery state 4". Consequently, the CBJC shuts down, and the empty battery symbol is not shown.

The battery level is measured via voltage level. This means that it is possible to experience e.g. that the battery switches from state 1 to state 2 and back to state 1.

Charging of battery



When the mains cable is plugged in and a control button is activated the symbol to the left is shown on the display until power down 2 minutes later. The purpose of the symbol is to tell the user that it is not possible to use the lift when it is plugged in to the mains.

Short circuit



If there is a short circuit the control box will show the short circuit symbol with a recommendation to check the connections.

The symbol will be shown until the short circuit has been repaired.

Service

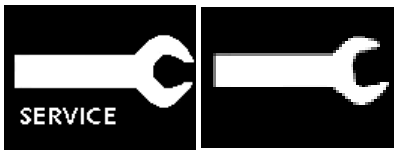

The control box will show the service symbol when it is time for service. The standard setting is after 12 months/8000 cycles. After each power down, the first time that the service symbol is shown the control box will provide an audio sound (100 milli seconds) so that the user gets a reminder about checking the display.

The 'SERVICE' text will blink 3 times, then a static service symbol will be shown (10 seconds in total). Even though it is time for service the system will still be functional and work as normal.

Overload Channel 1 only



When overload occurs (according to the pre- defined current cut-off limit) the overload symbol will be shown on the display. The 'MAX' text will blink 3 times and the overload symbol will be shown for 10 seconds in total.

Service information read-out

Basic service information can be read out on the display. To get the service information on the display please press the lifting arm up button (only ½ second press). The information will be shown for ½ minute or until other buttons are activated.

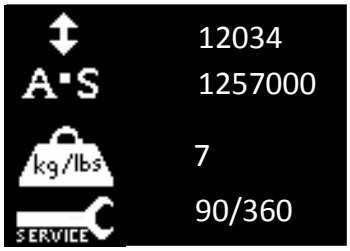

— — →Total cycles done on channel 1

— — →Total work done on channel 1

— — →Total number of overloads (channel 1)

— — →Days since last service/Days between services

If "No days" are chosen for service interval then the display will show Days since last service /-.

Recommendations

- The purpose of using learn mode function is to adjust the lift to no more than 1.5 times the max. load. The actuator will not stop exactly at the load it has been adjusted to as the actuator uses less current when its components have been run in. When the max. current value has been registered using the learn mode function, the control box will be able to use max. current +10 %. This ensures that the lift is capable of lifting the set load, however it cannot lift more than 1.5 times of the set load.
- When registering current limits, be aware to use a defined set of actuator and control box
- The ambient temperature must be approx. 20 °C
- The difference between the highest and lowest load must not be more than max. 10 %
- To activate the learn mode function, use the special hand control (HB7x235-00)
- If an actuator or CBJC is exchanged, it is necessary to reset the max. load to ensure the correct cut-off value for the new system
- Always use fully charged batteries for learn mode procedures
- A max. cut-off value of 11 Amp can be registered (stored)
- The tolerance for preset current cut-off is: +/- 1 Amp
- The current cut-off value can be reset by means of the learn mode function, however this is not in accordance with EN10535

Mounting of CBJC

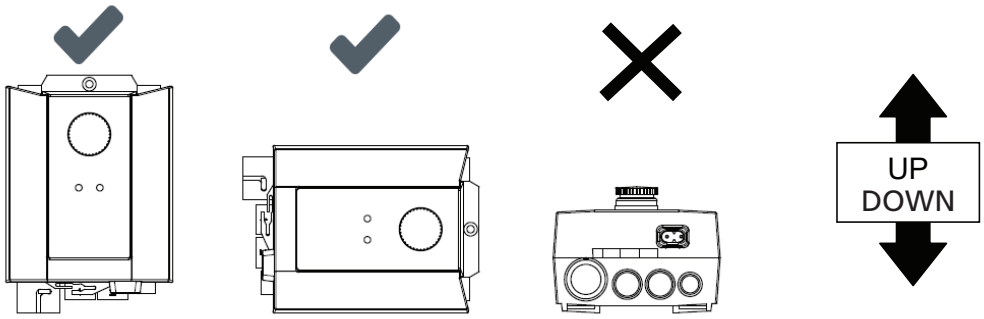

Recommendations

Special care should be taken when mounting the CBJC.

As long as the the CBJC is mounted correctly then the CBJC complies to IPX4. If the CBJC is mounted incorrectly then water will gather around the screw holes resulting in non-compliance with IPX4!

If the control box is equipped with emergency stop, the stop button must be activated in cleaning situations in order to comply with IPX4.

The battery pack BAJ or BAJL must NOT be removed in cleaning situations, doing so could result in non-compliance with IPX4.

If the CBJC is fitted with external charger option (DC power connector), the protection plug ex. 00918174 must always be inserted to ensure IP protection, if the port is not used.

IP rating only applies when the battery is connected to the control box.

CHJ2



The battery charger CHJ2 is part of the modular JUMBO system for patient lifts. Together with this charger, JUMBO is an ideal and flexible system solution.

Usage

Nominal current draw:	Max. 600 mA
Power consumption (standby):	Max. 2.5 W
Power consumption (charging):	Max. 19 W
Ambient temperature	+5 °C to +40 °C
Storage temperature:	-10 °C to +50 °C
Relative humidity:	20% to 80% - non-condensing
Atmospheric pressure:	700 to 1060 hPa
Height above sea level:	Max. 3000 meters

Mains supply grid should be limited to the highest prospective short circuit current of 35 A.

Demands to mains supply safety for the application in accordance with IEC 60601-1 ed. 3.2, § 8.11.5

Approvals:	IEC60601-1 ANSI/AAMI ES60601 CAN / CSA-22.2 No 60601-1

Mounting bracket MBJ



The mounting bracket MBJ is part of the modular JUMBO system for patient lifts. The mounting bracket offers easy mounting of the JUMBO system whenever it is on the application or on the wall. The MBJ bracket is available in various lengths for perfect fitting.

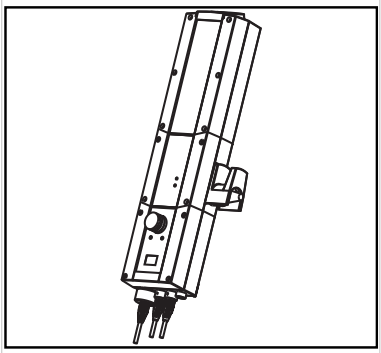

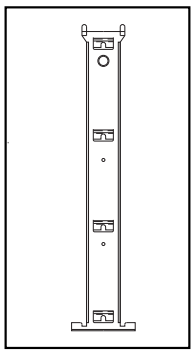

MBJ1

For use together with CBJ2, CBJC, CHJ2 and BAJ. I.e. when combining control box, charger and battery pack MBJ1 is to be used

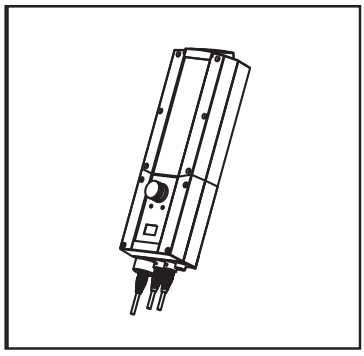

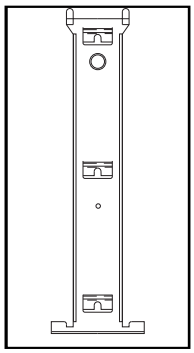

MBJ2

For use together with CBJ2, CBJC and BAJ. I.e. when combining control box and battery pack MBJ2 has to be used.

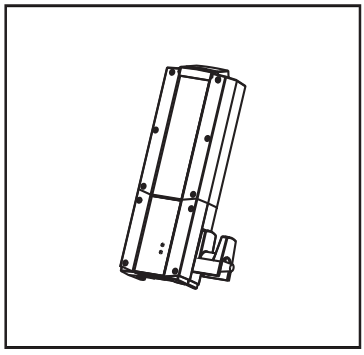

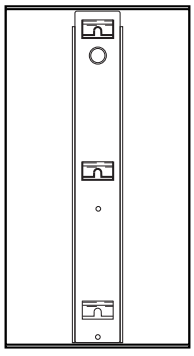

MBJ3

For use together with CHJ2 and BAJ. I.e. when combining charger and battery pack MBJ3 has to be used.

Information

- All three order numbers for brackets include matching screws (IPX1, IPXX and IPX5 are delivered with stainless screws)
- IP protection according to mounting instructions in sections CBJ2 and CBJC.

CBJ Home



The CBJ-Home is a specially developed solution for patient lifts. The complete system consists of a control box and a battery enclosed in a single elegant module.

Usage

CBJ Home with internal charger:	Nominal current draw max. 280 mA
	Power consumption (standby) max. 1.3 W
	Power consumption (charging) max. 12 W
Duty cycle:	Max. 10 % or 2 min. continuous use then 18 min. without use
Ambient temperature:	+ 5 °C to + 40 °C
Storage temperature:	- 10 °C to + 50 °C
Relative humidity:	20% to 80% - non-condensing
Atmospheric pressure:	700 to 1060 hPa
Height above sea level:	Max. 3000 meters

Mains supply grid should be limited to the highest prospective short circuit current of 35 A.

Demands to mains supply safety for the application in accordance with IEC 60601-1 ed. 3.2, § 8.11.5

Approvals:	IEC60601-1, ANSI/AAMI ES60601

Recommendations

- If emergency stop is pressed whilst charging, the batteries will not be charged.
- When charging, the CBJ Home will not be able to operate any actuators.
- For recharging the batteries, use charger CH01 (charger has to be ordered separately).
- Note: Always mount the CBJ Home with the channel sockets facing downwards.
- The CBJ Home is not intended for use with "buffer" type actuators such as LA28.
- The actuator must always be fitted with an exchangeable cable (mini-fit) socket.
- Actuators on channel 1 must always be with spline.
- The mains cables must always be ordered separately when ordering a CBJ with an internal charger.
- Use only original LINAK mains cables to ensure proper connection to internal charger.
- Always use fully charged batteries for learning mode procedures.
- Only an authorised LINAK service centre should change a battery in a CBJ Home. If a CBJ Home is opened and a battery is changed by unauthorised personnel, there may be a risk of malfunction.
- When using the control box with emergency stop button, the stop button must be released before charging batteries or before the application is put into operation.
- It cannot be guaranteed that the actuator will stop exactly at the weight that is stored as the motors in the actuators will use less current when run in. Though it will never reach the 1.5 times max. load as the norm states.
- Tolerance for current cut off is: +/-10 %
- The maximum cut-off value that can be registered (stored) is 8 Amp.
- If an actuator or CBJ Home is exchanged it will be necessary to reset the max. load to ensure the correct cut-off value for the new system as a whole.
- The registration function can only be activated by using a specially produced hand control (HB7X161-00). A standard hand control cannot activate the function.
- To operate the "Learn mode" function in External charger versions produced before February 2010 press the "R" button when "learning" (the lifting arm actuator will operate automatically). With all other versions (and future versions with external charger) both the "R" button and the "lifting arm" button need to be pressed.
- It is possible to use the "learn mode" function for channel 2: To operate the learn mode function for channel 2, press the "R" button and the "leg spread out" button at the same time. Run actuator with load and full cycle to record maximum current during a cycle.

Warnings

- In order to avoid injury, the emergency stop should be activated in transport situations.
- When "learn mode" is used, and channel 2 is pressed instead of channel 1, the CBJ Home will learn a new current limit of nearly 0 Amp. This will make it impossible to run the actuator with channel 2 until a new learn mode has been programmed.

Mounting information

The CBJ Home is mounted by means of 2 screws: Type ISO4762-M6x90-8.8 (not supplied by LINAK)

Spares information

The cable lock kit consists of the following 3 items:

- 2 x screws
- 1 x blind plug for ch. 2 if not in use
- Cable Lock

All the cable lock items are included when ordering the kit, article number: 0898001-B.

The mounting screws for the control box and the charger must be tightened with a maximum torque of 1 Nm.

CH01



The CH01 Battery Charger gives the possibility to interchange the plug type with a simple slide-on operation.

This gives great versatility and a logistical advantage reducing stocks and costs.

Usage

Usage temparature:	+5 °C to +40 °C
Storage temperature:	-10 °C to +50 °C
Relative humidity:	20% to 80% - non-condensing
Atmospheric pressure:	700 to 1060 hPa
Height above sea level:	Max. 3000 meters
Power consumption:	< 0.5 W
Approvals:	IEC 60601-1 PSE

Contacts

FACTORIES

Denmark - Headquarters
LINAK A/S
Phone: +45 73 15 15 15
Fax: +45 74 45 80 48
Fax (Sales): +45 73 15 16 13
Web: www.linak.com

China
LINAK (Shenzhen) Actuator Systems, Ltd.
Phone: +86 755 8610 6656
Phone: +86 755 8610 6990
Web: www.linak.cn

Slovakia
LINAK Slovakia s.r.o.
Phone: +421 51 7563 444
Web: www.linak.sk

Thailand
LINAK APAC Ltd.
Phone: +66 33 265 400
Web: www.linak.com

USA
LINAK U.S. Inc.
Americas Headquarters
Phone: +1 502 253 5595
Fax: +1 502 253 5596
Web: www.linak-us.com
www.linak-latinamerica.com

SUBSIDIARIES

Australia
LINAK Australia Pty. Ltd
Phone: +61 3 8796 9777
Fax: +61 3 8796 9778
E-mail: sales@linak.com.au
Web: www.linak.com.au

Austria
LINAK Zweigniederlassung - Österreich (Wien)
Phone: +43 (1) 890 7446
Fax: +43 (1) 890 744615
E-mail: info@linak.de
Web: www.linak.at - www.linak.hu

Belgium
LINAK Actuator-Systems NV/SA
(Belgium & Luxembourg)
Phone: +32 (0)9 230 01 09
E-mail: beinfo@linak.be
Web: www.linak.be - www.fr.linak.be

Brazil
LINAK Do Brasil Comércio De Atuadores Ltda.
Phone: +55 (11) 2832 7070
Fax: +55 (11) 2832 7060
E-mail: info@linak.com.br
Web: www.linak.com.br

Canada
LINAK Canada Inc.
Phone: +1 502 253 5595
Fax: +1 416 255 7720
E-mail: info@linak.ca
Web: www.linak-us.com

Czech Republic
LINAK C&S s.r.o.
Phone: +42 058 174 1814
Fax: +42 058 170 2452
E-mail: info@linak.cz
Web: www.linak.cz - www.linak.sk

Denmark - International
LINAK International
Phone: +45 73 15 15 15
E-mail: info@linak.com
Web: www.linak.com

Denmark - Sales
LINAK Danmark A/S
Phone: +45 86 80 36 11
Fax: +45 86 82 90 51
E-mail: linak@linak-silkeborg.dk
Web: www.linak.dk

Finland
LINAK OY
Phone: +358 10 841 8700
E-mail: linak@linak.fi
Web: www.linak.fi

France
LINAK France E.U.R.L
Phone: +33 (0) 2 41 36 34 34
Fax: +33 (0) 2 41 36 35 00
E-mail: linak@linak.fr
Web: www.linak.fr

Germany
LINAK GmbH
Phone: +49 6043 9655 0
Fax: +49 6043 9655 60
E-mail: info@linak.de
Web: www.linak.de

India
LINAK A/S India Liaison Office
Phone: +91 120 4531797
Fax: +91 120 4786428
E-mail: info@linak.in
Web: www.linak.in

Ireland
LINAK UK Limited (Ireland)
Phone: +44 (0)121 544 2211
Fax: +44 (0)121 544 2552
+44 (0)796 855 1606 (UK Mobile)
+35 387 634 6554 (Rep.of Ireland Mobile)
E-mail: sales@linak.co.uk
Web: www.linak.co.uk

Italy
LINAK ITALIA S.r.l.
Phone: +39 02 48 46 33 66
Fax: +39 02 48 46 82 52
E-mail: info@linak.it
Web: www.linak.it

Japan
LINAK K.K.
Phone: 81-45-533-0802
Fax: 81-45-533-0803
E-mail: linak@linak.jp
Web: www.linak.jp

Malaysia
LINAK Actuators Sdn. Bhd.
Phone: +60 4 210 6500
Fax: +60 4 226 8901
E-mail: info@linak-asia.com
Web: www.linak.my

Netherlands
LINAK Actuator-Systems B.V.
Phone: +31 76 5 42 44 40 /
+31 76 200 11 10
E-mail: info@linak.nl
Web: www.linak.nl

New Zealand
LINAK New Zealand Ltd
Phone: +64 9580 2071
Fax: +64 9580 2072
E-mail: nzsales@linak.com.au
Web: www.linak.com.au

Norway
LINAK Norge AS
Phone: +47 32 82 90 90
E-mail: info@linak.no
Web: www.linak.no

Poland
LINAK Polska
LINAK Danmark A/S (Spólka Akcyjna)
Phone: +48 22 295 09 70 /
+48 22 295 09 71
E-mail: info@linak.pl
Web: www.linak.pl

Republic of Korea
LINAK Korea Ltd.
Phone: +82 2 6231 1515
Fax: +82 2 6231 1516
E-mail: info@linak.kr
Web: www.linak.kr

Slovakia
LINAK Slovakia S.R.O.
Phone: +421 51 7563 444
Web: www.linak.sk

Spain
LINAK Actuadores, S.L.u
Phone: +34 93 588 27 77
Fax: +34 93 588 27 85
E-mail: esma@linak.es
Web: www.linak.es

Sweden
LINAK Scandinavia AB
Phone: +46 8 732 20 00
Fax: +46 8 732 20 50
E-mail: info@linak.se
Web: www.linak.se

Switzerland
LINAK AG
Phone: +41 43 388 31 88
E-mail: info@linak.ch
Web: www.linak.ch - www.fr.linak.ch
www.it.linak.ch

Taiwan
LINAK (Shenzhen) Actuator systems Ltd.
Taiwan Representative office
Phone: +886 2 272 90068
Fax: +886 2 272 90096
E-mail: sales@linak.com.tw
Web: www.linak.com.tw

Turkey
LINAK İth. İhr. San. ve Tic. A.Ş.
Phone: + 90 312 4726338
Fax: + 90 312 4726635
E-mail: info@linak.com.tr
Web: www.linak.com.tr

United Kingdom
LINAK UK Limited
Phone: +44 (0)121 544 2211
Fax: +44 (0)121 544 2552
E-mail: sales@linak.co.uk
Web: www.linak.co.uk

DISTRIBUTORS

Argentina
Novotec Argentina SRL
Phone: 011-4303-8989 / 8900
Fax: 011-4032-0184
E-mail: info@novotecargentina.com
Web: www.novotecargentina.com

Colombia
MEM Ltda
Phone: +[57] (1) 334-7666
Fax: +[57] (1) 282-1684
E-mail: servicioalcliente@memltda.com.co
Web: www.mem.net.co

India
Mechatronics Control Equipments India Pvt Ltd
Phone: +91-44-28558484, 85
E-mail: bala@mechatronicscontrol.com
Web: www.mechatronicscontrol.com

Indonesia
PT. Himalaya Everest Jaya
Phone: +6 221 544 8956 /+6 221 544 8965
Fax: +6 221 619 1925
Fax (Sales): +6 221 619 4658
E-mail: hejplastic-div@centrin.net.id
Web: www.hej.co.id

Israel
NetivTech LTD
Phone: +972 55-2266-535
Fax: +972 2-9900-560
Email: info@NetivTech.com
Web: www.netivtech.com

Singapore
Servo Dynamics Pte Ltd
Phone: +65 6844 0288
Fax: +65 6844 0070
E-mail: servodynamics@servo.com.sg

South Africa
Industrial Specialised Applications CC
Phone: +27 011 466 0346
E-mail: gartht@isagroup.co.za
Web: www.isaza.co.za

United Arab Emirates
Mechatronics
Phone: +971 4 267 4311
Fax: +971 4 267 4312
E-mail: mechtron@emirates.net.ae

Terms of use

LINAK® takes great care to provide accurate and up-to-date information about its products. However, it is the responsibility of the user to determine the suitability of LINAK products for any specific application. Due to ongoing product development, LINAK products are subject to continuous modifications and changes. LINAK reserves the right to make such modifications, updates, and changes without prior notice. For this reason, LINAK cannot guarantee the accuracy or current status of printed information about its products.

LINAK uses its best efforts to fulfil orders. However, for the reasons mentioned above, LINAK cannot guarantee availability of any particular product at any given time. LINAK reserves the right to discontinue the sale of any product displayed on its website or listed in its catalogues or in other written material created and produced by LINAK, LINAK subsidiaries, or LINAK affiliates.
All sales are subject to the applicable terms and conditions of sale and delivery available on LINAK websites.
LINAK and the LINAK logotype are registered trademarks of LINAK A/S. All rights reserved.

Copyright© LINAK • 2026-10 • UT-63-02-008 P

LINAK®
WE IMPROVE YOUR LIFE