DL2
Data Sheet



LINAK®
WE IMPROVE YOUR LIFE



The DL2 column is designed for a wide range of workstation applications and is the ideal choice for height adjustment of consoles, computer workstations, or industrial work benches.

The DL2 column is designed for a wide range of workstation applications and is the ideal choice for tasks such as height adjustment of computer workstations, industrial work benches, or kitchens.

Depending on the control box, the columns can be used as a single column or with 2, 3 or 4 columns in parallel systems, or up to 16 columns in multi-parallel systems.

A variety of desk panels can be used for adjusting the system.

Features/Options/Accessories/Compatibility/Usage

Features

- Two-part column
- In combination with CBD6S:

Parameter	With CBD6S		
Spindle pitch	6 mm	9 mm	12 mm
Max. speed (unloaded)	10 mm/s	15 mm/s	20 mm/s
Max. load (per column)	2500 N	1500 N	1000 N
Max. self-lock (per column)	2500 N	1500 N	1000 N

- Installation dimension: Various
- Stroke length (all ±4 mm): 300 mm
  350 mm
  500 mm
- Weight: Approximately 11.5 kg to 14.5 kg depending on installation dimension and stroke length
- Dimensions:
  - Column: 147 x 194 mm
  - 8 mm end plates: 160 x 244 x 8 mm
  - 3 mm end plates: flush with the profiles
- Compact and mounting-friendly design
- Dynamic bending moment (at 100 % stroke length): My+/Mx+ = 250 Nm and My-/Mx- = 200 Nm
- Colour:
  - Profiles: Natural anodised aluminium
  - End plates:

8 mm	3 mm
Black (RAL 9005)	Grey (RAL 9006)

- Built-in limit switches (not adjustable)
- Columns without built-in control box are fitted with a 100 mm mini-fit cable
- Low sound level

Options

- With built-in CBD6S and selected mains cable

Accessories

- Dovetail bracket (bending moment: max. 120 Nm)

Compatibility

- DESKLINE® control boxes (with special configuration)
- DESKLINE® controls

Usage

- Single drive or parallel drive
  - CBD6S (200 W):
    Up to 2 DL2 can be connected in parallel systems. The speed is constant within the working range
  - CBD6S (300 W):
    Up to 4 DL2 can be connected in parallal systems
    Up to 16 DL2 in multi-parallel systems
- Duty cycle: max. 5 % ≈ max. 1 minute continuous use followed by 19 minutes pause
- For indoor use in dry locations

Parameter	Operation	Storage and transportation
Temperature	10 to 40 °C	-10 to +70 °C
Relative humidity	20% to 80% - non-condensing	20% to 80% - non-condensing
Atmospheric pressure	800 to 1060 hPa	700 to 1060 hPa
Altitude	Max. 2000 m	N/A

For system compliance, please refer to the Declaration of Conformity in the User Manual and to the CBD6S Data Sheet.

Ordering

DL2

ACTUATOR	3	3 = 9 mm pitch 6 = 12 mm pitch 7 = 6 mm pitch (only 8 mm end plates and max. 300 mm stroke)
END PLATES	0	0 = 8 mm end plates, black 1 = 3 mm end plates, grey ** 2 = 3 mm top plate and 8 mm bottom plate *** 3 = 8 mm top plate and 3 mm bottom plate ***
POSITIONING	C	C = Hall sensor
COLOUR	A	A = Natural anodized aluminium profile (grey top frame) B = Natural anodized aluminium profile (black top frame)
CONTROL BOX	0	0 = Without built-in control box F = Built-in CBD6S, 230 V (P 0 0 0 2 0 A - 0 0 9 *) G = Built-in CBD6S, 120 V (P 0 0 0 2 0 A - 1 0 9 *)
CABLE TYPE	0	0 = Without built-in control box All cables without earth (2P) Class 2 1 = Straight EU cable, Grey, 3.2 m 2 = Straight EU cable, Black, 3.2 m 3 = Straight UK cable, Black, 3.2 m 4 = Straight US cable, Black, 3.2 m 5 = Straight AUS cable, Black, 3.2 m 6 = Straight Japan cable, Black, 3.2 m 7 = Straight CH cable, Black, 3.2 m
STROKE LENGTH	500	300 = 300 mm (for columns with installation dimension 445 to 455 mm) 350 = 350 mm (for columns with installation dimension 495 to 505 mm) 500 = 500 mm (for columns with installation dimension 645 to 665 mm)
INSTALLATION DIMENSION	655	455 = S(300) + 155 mm incl. 2 pcs. 8 mm end plates 450 = S(300) + 150 mm incl. 1 pc. 8 mm + 1 pc. 3 mm end plates 445 = S(300) + 145 mm incl. 2 pcs. 3 mm end plates 505 = S(350) + 155 mm incl. 2 pcs. 8 mm end plates 500 = S(350) + 150 mm incl. 1 pc. 8 mm + 1 pc. 3 mm end plates 495 = S(350) + 145 mm incl. 2 pcs. 3 mm end plates 655 = S(500) + 155 mm incl. 2 pcs. 8 mm end plates 650 = S(500) + 150 mm incl. 1 pc. 8 mm + 1 pc. 3 mm end plates 645 = S(500) + 145 mm incl. 2 pcs. 3 mm end plates

DL230CA00500655

**: The mains cable:*
The DL2 with a built-in CBD6S is delivered with a fixed mains cable
(Coiled cable and cable with earth connection are no options)
The cable length will be reduced by 300 mm ±100 mm compared to the standard length

***: For mounting of the desk frame the following screws are delivered: 8 x DG 80x35*

****: For mounting of the desk frame the following screws are delivered: 4 x DG 80x35*

DL2 6 mm pitch is only available with 8 mm end plates and max. 300 mm stroke length.

Technical data

The following data is measured in connection with 2 to 4 lifting columns and control box CBD6S. The application is driving upwards.

The curves below apply to a centrally placed load. With moment load, there will be increased friction in the columns, which will reduce the lifting force correspondingly.

Performance curve (CBD6S)

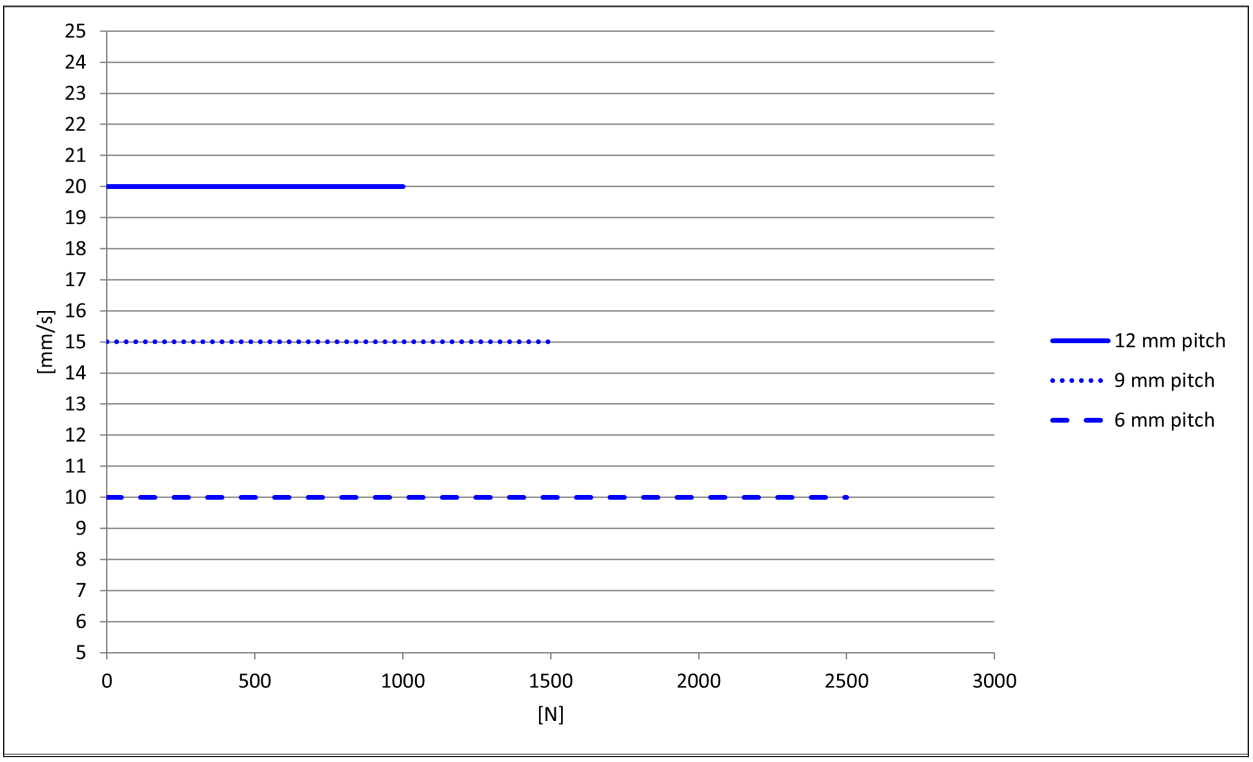

Figure 1 One DL2 with CBD6S

Dynamic bending moment directions

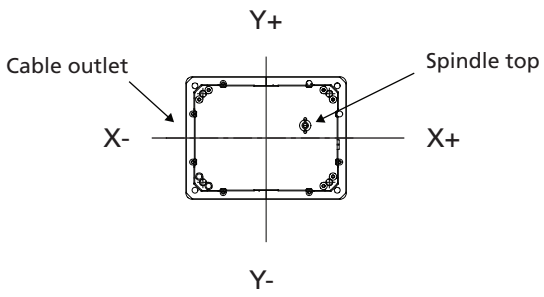

Figure 2 DL2 without built-in CBD6S

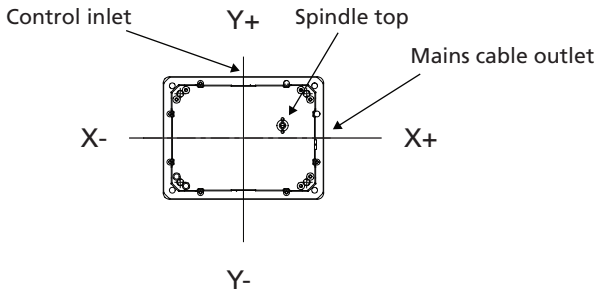

Figure 3 DL2 with built-in CBD6S

The drawings above are top views for identification of the directions of the bending moment.

Dimension drawings

All dimensions are in mm.

LA31 in combination with CBD6S needs to be initialised at start-up. When the system is initialised, the actuator will stop before the end switches. Therefore, the stroke length is reduced, and the installation dimension is increased. The values are the same for the different spindle types.

Stroke length reduction: 3 mm

Installation dimension increase: 1.5 mm

DL2

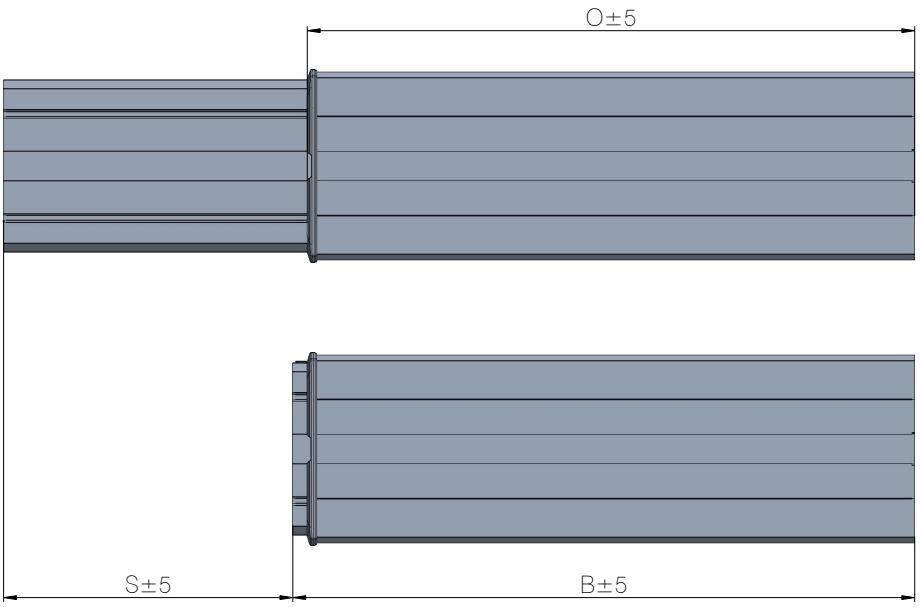

Drawing no. 0579002

Combination code	S (Stroke length)	B (Built-in length)	O (Outer profile length)
DL2xxxxxx300xxx	300	445 / 450 / 455	420
DL2xxxxxx350xxx	350	495 / 500 / 505	470
DL2xxxxxx500xxx	500	645 / 650 / 655	620

Figure 4 Built-in length, stroke length, and outer profile length

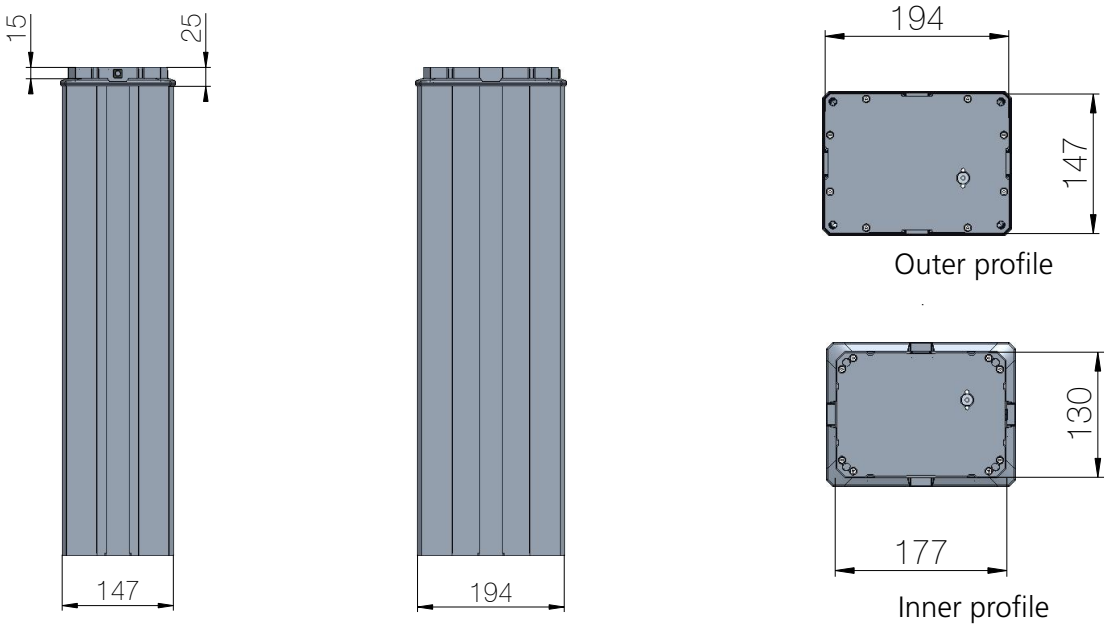

Drawing no. 0579002

Figure 5 Profile

End plates

LINAK A/S supplies the lifting column with either 8 mm or 3 mm end plates. The DL2 can be prepared for built-in CBD6S.

Installation dimensions:
Column length without end plates + 2 x the thickness of the end plates.
Example: 639 mm + (2 x 8 mm) = 655 mm.

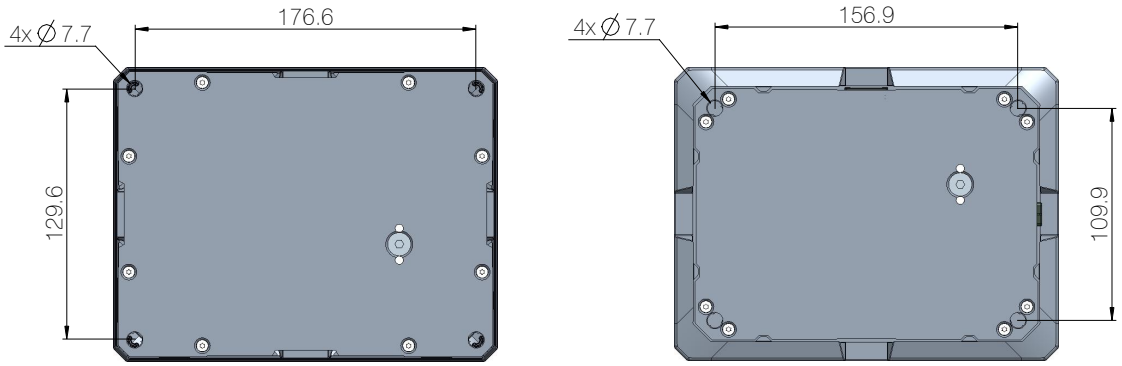

Drawing no. 0579002

Figure 6 3 mm bottom plate (left) and top plate (right)

The maximum torque for tightening the DG 80x35 screws included for DL2 colums with 3 mm end plates is 15 Nm.

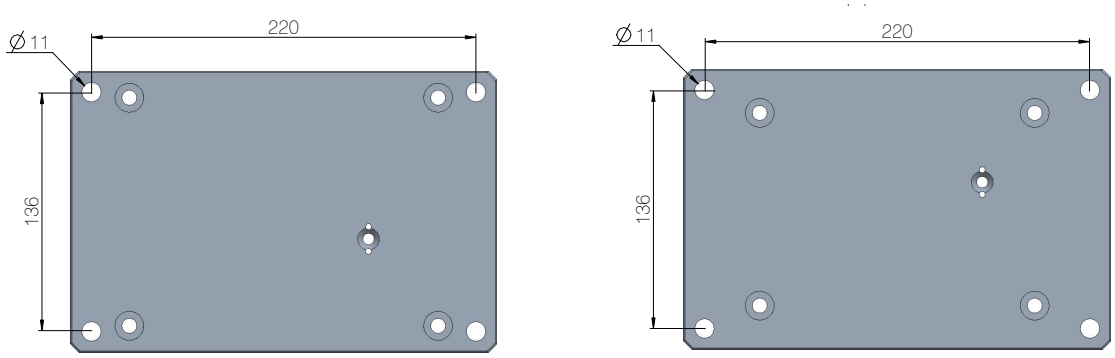

Drawing no. 0579002

Figure 7 8 mm bottom plate (left) and top plate (right)

Dovetail bracket

The dovetail bracket can for example be used for placement of a crossbar, a customised cover for encapsulation, a control box, or a computer.

The dovetail bracket item number is: **0578006**.

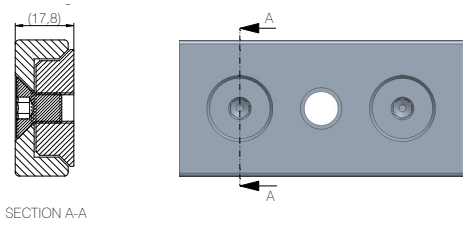

Drawing no. 0579002

Figure 8 Dovetail bracket (assembled)

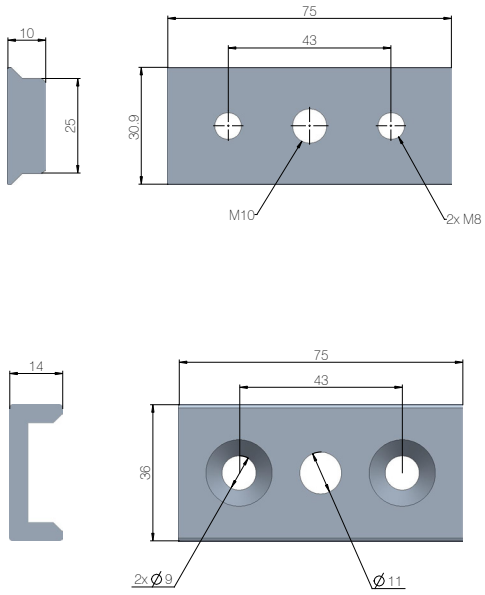

Drawing no. 0579002

Figure 9 Dovetail bracket (parts)

Contacts

FACTORIES

Denmark - Headquarters
LINAK A/S
Phone: +45 73 15 15 15
Fax: +45 74 45 80 48
Fax (Sales): +45 73 15 16 13
Web: www.linak.com

China
LINAK (Shenzhen) Actuator Systems, Ltd.
Phone: +86 755 8610 6656
Phone: +86 755 8610 6990
Web: www.linak.cn

Slovakia
LINAK Slovakia s.r.o.
Phone: +421 51 7563 444
Web: www.linak.sk

Thailand
LINAK APAC Ltd.
Phone: +66 33 265 400
Web: www.linak.com

USA
LINAK U.S. Inc.
Americas Headquarters
Phone: +1 502 253 5595
Fax: +1 502 253 5596
Web: www.linak-us.com
www.linak-latinamerica.com

SUBSIDIARIES

Australia
LINAK Australia Pty. Ltd
Phone: +61 3 8796 9777
Fax: +61 3 8796 9778
E-mail: sales@linak.com.au
Web: www.linak.com.au

Austria
LINAK Zweigniederlassung - Österreich (Wien)
Phone: +43 (1) 890 7446
Fax: +43 (1) 890 744615
E-mail: info@linak.de
Web: www.linak.at - www.linak.hu

Belgium
LINAK Actuator-Systems NV/SA
(Belgium & Luxembourg)
Phone: +32 (0)9 230 01 09
E-mail: beinfo@linak.be
Web: www.linak.be - www.fr.linak.be

Brazil
LINAK Do Brasil Comércio De Atuadores Ltda.
Phone: +55 (11) 2832 7070
Fax: +55 (11) 2832 7060
E-mail: info@linak.com.br
Web: www.linak.com.br

Canada
LINAK Canada Inc.
Phone: +1 502 253 5595
Fax: +1 416 255 7720
E-mail: info@linak.ca
Web: www.linak-us.com

Czech Republic
LINAK C&S s.r.o.
Phone: +42 058 174 1814
Fax: +42 058 170 2452
E-mail: info@linak.cz
Web: www.linak.cz - www.linak.sk

Denmark - International
LINAK International
Phone: +45 73 15 15 15
E-mail: info@linak.com
Web: www.linak.com

Denmark - Sales
LINAK Danmark A/S
Phone: +45 86 80 36 11
Fax: +45 86 82 90 51
E-mail: linak@linak-silkeborg.dk
Web: www.linak.dk

Finland
LINAK OY
Phone: +358 10 841 8700
E-mail: linak@linak.fi
Web: www.linak.fi

France
LINAK France E.U.R.L
Phone: +33 (0) 2 41 36 34 34
Fax: +33 (0) 2 41 36 35 00
E-mail: linak@linak.fr
Web: www.linak.fr

Germany
LINAK GmbH
Phone: +49 6043 9655 0
Fax: +49 6043 9655 60
E-mail: info@linak.de
Web: www.linak.de

India
LINAK A/S India Liaison Office
Phone: +91 120 4531797
Fax: +91 120 4786428
E-mail: info@linak.in
Web: www.linak.in

Ireland
LINAK UK Limited (Ireland)
Phone: +44 (0)121 544 2211
Fax: +44 (0)121 544 2552
+44 (0)796 855 1606 (UK Mobile)
+35 387 634 6554 (Rep.of Ireland Mobile)
E-mail: sales@linak.co.uk
Web: www.linak.co.uk

Italy
LINAK ITALIA S.r.l.
Phone: +39 02 48 46 33 66
Fax: +39 02 48 46 82 52
E-mail: info@linak.it
Web: www.linak.it

Japan
LINAK K.K.
Phone: 81-45-533-0802
Fax: 81-45-533-0803
E-mail: linak@linak.jp
Web: www.linak.jp

Malaysia
LINAK Actuators Sdn. Bhd.
Phone: +60 4 210 6500
Fax: +60 4 226 8901
E-mail: info@linak-asia.com
Web: www.linak.my

Netherlands
LINAK Actuator-Systems B.V.
Phone: +31 76 5 42 44 40 /
+31 76 200 11 10
E-mail: info@linak.nl
Web: www.linak.nl

New Zealand
LINAK New Zealand Ltd
Phone: +64 9580 2071
Fax: +64 9580 2072
E-mail: nzsales@linak.com.au
Web: www.linak.com.au

Norway
LINAK Norge AS
Phone: +47 32 82 90 90
E-mail: info@linak.no
Web: www.linak.no

Poland
LINAK Polska
LINAK Danmark A/S (Spólka Akcyjna)
Phone: +48 22 295 09 70 /
+48 22 295 09 71
E-mail: info@linak.pl
Web: www.linak.pl

Republic of Korea
LINAK Korea Ltd.
Phone: +82 2 6231 1515
Fax: +82 2 6231 1516
E-mail: info@linak.kr
Web: www.linak.kr

Slovakia
LINAK Slovakia S.R.O.
Phone: +421 51 7563 444
Web: www.linak.sk

Spain
LINAK Actuadores, S.L.u
Phone: +34 93 588 27 77
Fax: +34 93 588 27 85
E-mail: esma@linak.es
Web: www.linak.es

Sweden
LINAK Scandinavia AB
Phone: +46 8 732 20 00
Fax: +46 8 732 20 50
E-mail: info@linak.se
Web: www.linak.se

Switzerland
LINAK AG
Phone: +41 43 388 31 88
E-mail: info@linak.ch
Web: www.linak.ch - www.fr.linak.ch
www.it.linak.ch

Taiwan
LINAK (Shenzhen) Actuator systems Ltd.
Taiwan Representative office
Phone: +886 2 272 90068
Fax: +886 2 272 90096
E-mail: sales@linak.com.tw
Web: www.linak.com.tw

Turkey
LINAK İth. İhr. San. ve Tic. A.Ş.
Phone: + 90 312 4726338
Fax: + 90 312 4726635
E-mail: info@linak.com.tr
Web: www.linak.com.tr

United Kingdom
LINAK UK Limited
Phone: +44 (0)121 544 2211
Fax: +44 (0)121 544 2552
E-mail: sales@linak.co.uk
Web: www.linak.co.uk

DISTRIBUTORS

Argentina
Novotec Argentina SRL
Phone: 011-4303-8989 / 8900
Fax: 011-4032-0184
E-mail: info@novotecargentina.com
Web: www.novotecargentina.com

Colombia
MEM Ltda
Phone: +[57] (1) 334-7666
Fax: +[57] (1) 282-1684
E-mail: servicioalcliente@memltda.com.co
Web: www.mem.net.co

India
Mechatronics Control Equipments India Pvt Ltd
Phone: +91-44-28558484, 85
E-mail: bala@mechatronicscontrol.com
Web: www.mechatronicscontrol.com

Indonesia
PT. Himalaya Everest Jaya
Phone: +6 221 544 8956 /+6 221 544 8965
Fax: +6 221 619 1925
Fax (Sales): +6 221 619 4658
E-mail: hejplastic-div@centrin.net.id
Web: www.hej.co.id

Israel
NetivTech LTD
Phone: +972 55-2266-535
Fax: +972 2-9900-560
Email: info@NetivTech.com
Web: www.netivtech.com

Singapore
Servo Dynamics Pte Ltd
Phone: +65 6844 0288
Fax: +65 6844 0070
E-mail: servodynamics@servo.com.sg

South Africa
Industrial Specialised Applications CC
Phone: +27 011 466 0346
E-mail: gartht@isagroup.co.za
Web: www.isaza.co.za

United Arab Emirates
Mechatronics
Phone: +971 4 267 4311
Fax: +971 4 267 4312
E-mail: mechtron@emirates.net.ae

Terms of use

LINAK® takes great care to provide accurate and up-to-date information about its products. However, it is the responsibility of the user to determine the suitability of LINAK products for any specific application. Due to ongoing product development, LINAK products are subject to continuous modifications and changes. LINAK reserves the right to make such modifications, updates, and changes without prior notice. For this reason, LINAK cannot guarantee the accuracy or current status of printed information about its products.

LINAK uses its best efforts to fulfil orders. However, for the reasons mentioned above, LINAK cannot guarantee availability of any particular product at any given time. LINAK reserves the right to discontinue the sale of any product displayed on its website or listed in its catalogues or in other written material created and produced by LINAK, LINAK subsidiaries, or LINAK affiliates.
All sales are subject to the applicable terms and conditions of sale and delivery available on LINAK websites.
LINAK and the LINAK logotype are registered trademarks of LINAK A/S. All rights reserved.

Copyright© LINAK • 2026-07 • LIT-12-02-045 C

LINAK®
WE IMPROVE YOUR LIFE