MEDLINE® IMPROVING EFFICIENCY CARELINE® IMPROVING EFFICIENCY

# Linear Actuator LA24 ICA

# **Data Sheet**





LINAK® WE IMPROVE YOUR LIFE

## Contents

**Introduction** ..... 3
**Features and options** ..... 4
**Usage** ..... 6
**Dimensions** ..... 7
**Ordering example** ..... 8
**Approvals and certifications** ..... 9
**Built-in dimension (BID) and stroke length (SL) compatibility matrix** ..... 10
**System overview** ..... 11
**Motor cable** ..... 12
**Packing** ..... 12
**Contacts** ..... 13

# Introduction



LA24 ICA (Integrated Control Analogue) combines the LA24 actuator with an analogue control box in the motor housing, simplifying installation and operation while also minimising the need for external components. The LA24 ICA supports synchronised movement in applications with up to four actuators with force up to 3500 N.

Designed with modularity in mind, the LA24 ICA operates using an external power supply, allowing customers to select the appropriate power output while keeping the application a low-voltage unit. The LA24 ICA system holds an IPX6 rating and is compatible with backup battery BA15.

The LA24 ICA system is designed for OEMs seeking a simple, reliable and economical solution for healthcare applications such as homecare beds and couches.

**Key features:**

- Integrated control box
- Reliable analogue functionality
- Easy and fast installation
- Modular power supply
- Cost-efficient design

# Features and options

### Actuator specifications

| | |
|---|---|
| Load in push: | 3,500 N, 2,500 N, 1,400 N |
| Load in pull: | LA24 with mechanical spline = not suitable for pull<br>LA24 without mechanical spline = Max. static pull = 500 N with safety factor 5<br>LA24 without mechanical spline = Max. pull = 500 N with safety factor below 5 |
| Dynamic push and pull: | LA24 ICA is designed for push applications.<br>If a combination of push and pull is required, please contact your local LINAK salesperson. |
| Housing colour: | Light Grey (RAL7035) |
| Protection class: | IPX4 and IPX6 |
| Motor housing material: | PP |
| Outer tube material: | Nylon with 22% glass fibre |
| Flammability rating: | V2 |
| Motor: | 24 V DC, Standard (B) |
| Stroke length: | 85 mm, 110 mm, 150 mm |
| Built-in dimensions: | 270 mm, 320 mm |
| Positioning (feedback) options: | None |
| Back fixture material: | Plastic composite |
| Piston rod eye: | Ø10.2 mm with or without slot, Ø12.2 mm without slot |
| Back fixture: | Ø10.2 mm and Ø12.2 mm |
| Noise level: | ≤50 dB[A] |
| Nut: | Guided |
| Safety nut: | In push |
| Mechanical spline: | Yes |
| Mechanical end stop: | Yes |
| Exchangeable cable: | Yes |
| Safety factor: | 2.0 |

**Control box specifications**

| | |
|---|---|
| Platform: | ICA (Integrated Control box Analogue) |
| Max. current: | Determined by external power supply characteristics. 8 A per channel |
| Actuator interface: | 4-channel version only:<br>Channel 1 (internal)<br>Channel 2+3+4 (external), 6-pin Mini-Fit ports |
| SMPS interface: | Compatible with external SMPS (Switch Mode Power Supplies).<br>The SMPS used in the system determines the power output characteristics.<br>4-pin Mini-Fit port |
| Hand control interface: | 1 port, 10-pin modular plug |
| Battery interface: | None<br>Only compatible with BA15 with BA15 T-cable CABL00057 via power supply port. |
| Built-in endstop switches: | Signal switches |
| Control concept | FET (no relay noise) |
| Power management: | Yes |
| Cable lock: | Integrated. See safety note in section below. |
| Optional cable lock release tool: | Light grey (RAL7035) |
| Actuator compatibility: | LA24 and KA30. For other actuators, please contact your local LINAK sales contact. |
| Hand control compatibility: | Analogue common positive. 100 mA available. |
| Accessories: | Analogue common standard. |
| Operation | Simultaneous drive (no actuator feedback)<br>LA24 ICA uses half-bridge technology. The following combinations are possible for instance to drive trend/anti-trend:<br>1+3<br>1+4<br>2+3<br>2+4 |

## Usage

| | |
|---|---|
| Operation temperature: | +5 °C to +40 °C |
| Storage temperature: | -10 °C to +50 °C |
| Duty cycle: | 10% or 2 minutes continuous use followed by 18 minutes not in use |
| Compatibility: | Compatible with SMPS10 (Class 2). |
| Relative humidity: | 20% to 80% – non-condensing |
| Atmospheric pressure: | 700 to 1060 hPa |
| Meters above sea level: | Max. 3000 meters |
| Approvals: | IEC60601-1<br>ANSI/AAMI ES60601-1<br>CAN/CSA-22.2 No 60601-1 |

## Dimensions

All dimensions are in mm.

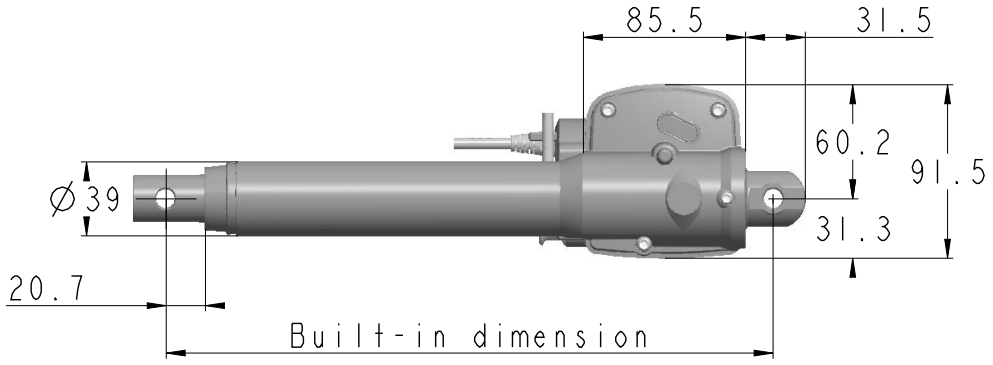


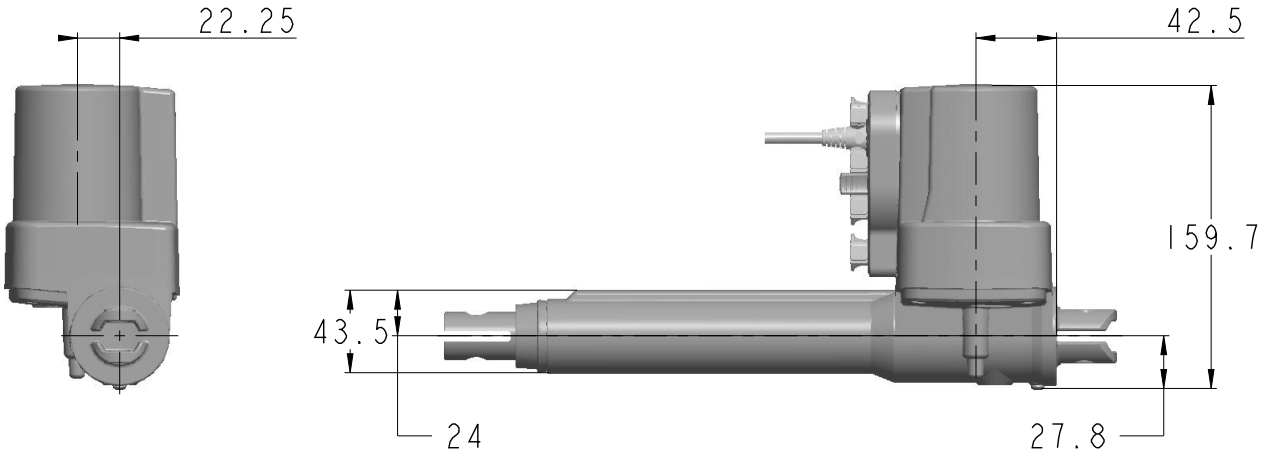


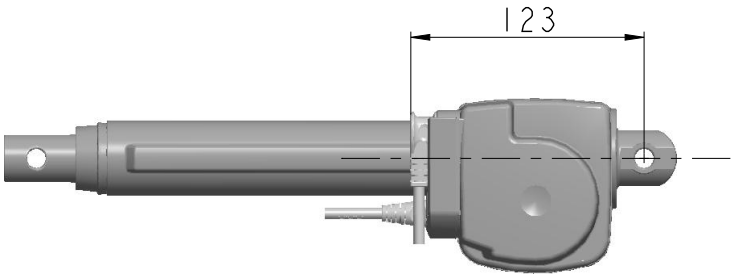


Drawing no.: 0244109

# Ordering example

| | | | | | |
|---|---|---|---|---|---|
| | LA | | | | |
| Actuator type: | 24 | | | | |
| Spindle pitch: | 040 | 040 | = | 4 mm | Push 3500 N |
| | | 050 | = | 5 mm | Push 3500 N |
| | | 060 | = | 6mm | Push 2500 N |
| | | 090 | = | 9 mm | Push 1400 N |
| Stroke length: | 110 | 085 | = | 85 mm | |
| | | 110 | = | 110 mm | |
| | | 150 | = | 150 mm | |
| Safety: | E | E | = | Mechanical end stop | |
| | | F | = | Mechanical end stop + safety nut | |
| | | G | = | Mechanical end stop + spline | |
| | | H | = | Mechanical end stop + spline + safety nut | |
| Feed Back: | 0 | 0 | = | None | |
| End Stop: | 01 | 01 | = | Signal switch | |
| Motor type: | B | B | = | 24 VDC Normal | |
| IP degree: | 4 | 4 | = | IPX4 | |
| | | 6 | = | IPX6 | |
| | - | | | | |
| Enclosure: | C | C | = | Light Grey RAL7035, ICA | For ICA (integrated control box) |
| | | E | = | Light Grey RAL7035, ICA, Release Tool | For ICA with cable lock release tool |
| Back fixture: | 1 | 1 | = | Standard 0° | Hole Ø 10.2 |
| | | 2 | = | Turned 90° | Hole Ø 10.2 |
| | | 3 | = | Standard 0° | Hole Ø 12.2 |
| | | 4 | = | Turned 90° | Hole Ø 12.2 |
| Piston rod eye: | 0 | 0 | = | Punched | Hole Ø 12.2, without slot |
| | | 1 | = | Punched with slot | Hole Ø 10.2 (hole Ø12.2 not available) |
| | | 2 | = | Punched | Hole Ø 10.2, without slot |
| Option position | 0 | 0 | = | None | |
| Brake | 1 | 1 | = | Brake push | |
| Install dimension (BID) | 0320 | 0270 | = | 270 mm | |
| | | 0320 | = | 320mm | |
| Fire category: | 2 | 2 | = | V2 | |
| Connector type: | D | D | = | Mini-Fit | For the SMPS and external actuator interfaces. |
| Cable | 0 | 0 | = | None | |
| Safety factor | 0 | 0 | = | 2.0 | |
| Integrated control box | 1 | 1 | = | ICA, external channel 2+3+4 | ICA (integrated control box analogue) available for these stroke lengths only: 85 mm,110 mm and 150 mm. |
| Not used | 0 | 0 | = | Specification missing | |

**LA24040110E001B4-C100103202D0010**

## Information

- LA24 ICA comes with a pre-mounted cable lock, additional spares can be ordered as 0243022-A (colour RAL7035).
- To avoid unintended release of the ICA cable lock, security screw no. 1046w1025-A (WN 1452 K35X12 TorX T15) must be ordered separately and installed after the cables have been connected. Recommended torque: 0.3 Nm

## Approvals and certifications

For approval documentation, LINAK recommends specifying the product type instead of individual item numbers to ensure broader approval coverage and simplify future product changes.

Listed LINAK item for application approval: LA24 ICA

If this is not possible, we advise being as non-specific as possible when specifying LINAK products in your approval application:

Listed LINAK item for application approval: LA24**********SS**********S**SSS

" * " is not safety critical and we recommend including a non-specific signifier such as an asterisk.

" S " is safety critical and represents a listed critical component in the product and cannot be left out.

For more information, please refer to "Approvals and certifications" in LINAK Application Design Recommendations found under User Manual for any given product on LINAK.com

# Built-in dimension (BID) and stroke length (SL) compatibility matrix

| Stroke length | Installation dimension | | | |
|---|---|---|---|---|
| | BID 270 | | BID 320 | |
| | with mech. spline | without mech. spline | with mech. spline | without mech. spline |
| SL 85 | | OK | OK | OK |
| SL 110 | | | OK | OK |
| SL 150 | | | | OK |

Not possible

OK: Max. load 3.500 N

## System overview

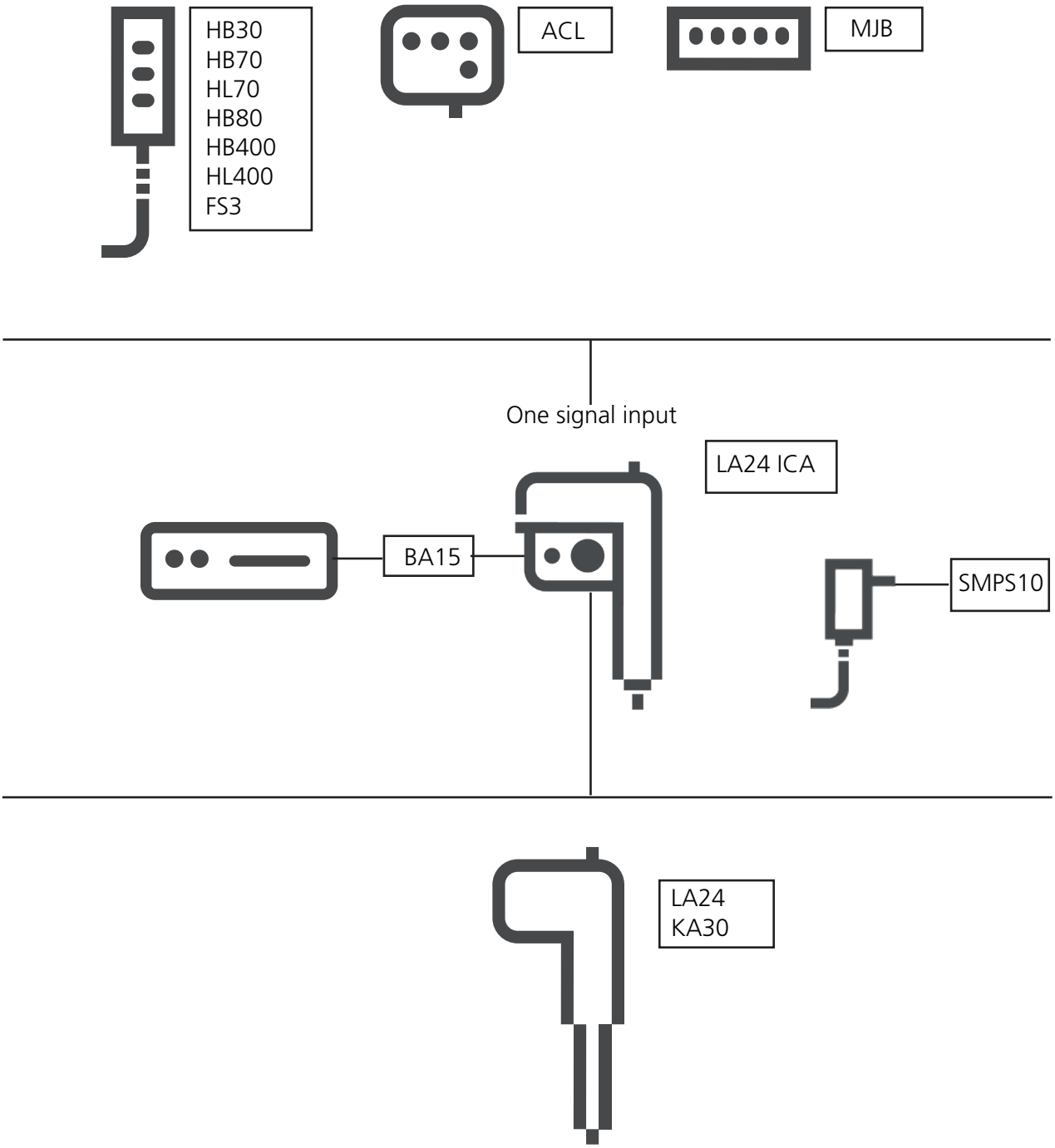

## Motor cable

Always use 6-pin Mini-Fit cables.

## Packing

The LA24 ICA is packed in full pallet boxes of 108 pieces in each. Order in multiple of 108 pieces.

# Contacts

**FACTORIES**

Denmark - Headquarters
LINAK A/S
Phone: +45 73 15 15 15
Fax: +45 74 45 80 48
Fax (Sales): +45 73 15 16 13
Web: www.linak.com

China
LINAK (Shenzhen) Actuator Systems, Ltd.
Phone: +86 755 8610 6656
Phone: +86 755 8610 6990
Web: www.linak.cn

Slovakia
LINAK Slovakia s.r.o.
Phone: +421 51 7563 444
Web: www.linak.sk

Thailand
LINAK APAC Ltd.
Phone: +66 33 265 400
Web: www.linak.com

USA
LINAK U.S. Inc.
Americas Headquarters
Phone: +1 502 253 5595
Fax: +1 502 253 5596
Web: www.linak-us.com
www.linak-latinamerica.com

**SUBSIDIARIES**

Australia
LINAK Australia Pty. Ltd
Phone: +61 3 8796 9777
Fax: +61 3 8796 9778
E-mail: sales@linak.com.au
Web: www.linak.com.au

Austria
LINAK Zweigniederlassung - Österreich (Wien)
Phone: +43 (1) 890 7446
Fax: +43 (1) 890 744615
E-mail: info@linak.de
Web: www.linak.at - www.linak.hu

Belgium
LINAK Actuator-Systems NV/SA
(Belgium & Luxembourg)
Phone: +32 (0)9 230 01 09
E-mail: beinfo@linak.be
Web: www.linak.be - www.fr.linak.be

Brazil
LINAK Do Brasil Comércio De Atuadores Ltda.
Phone: +55 (11) 2832 7070
Fax: +55 (11) 2832 7060
E-mail: info@linak.com.br
Web: www.linak.com.br

Canada
LINAK Canada Inc.
Phone: +1 502 253 5595
Fax: +1 416 255 7720
E-mail: info@linak.ca
Web: www.linak-us.com

Czech Republic
LINAK C&S s.r.o.
Phone: +42 058 174 1814
Fax: +42 058 170 2452
E-mail: info@linak.cz
Web: www.linak.cz - www.linak.sk

Denmark - International
LINAK International
Phone: +45 73 15 15 15
E-mail: info@linak.com
Web: www.linak.com

Denmark - Sales
LINAK Danmark A/S
Phone: +45 86 80 36 11
Fax: +45 86 82 90 51
E-mail: linak@linak-silkeborg.dk
Web: www.linak.dk

Finland
LINAK OY
Phone: +358 10 841 8700
E-mail: linak@linak.fi
Web: www.linak.fi

France
LINAK France E.U.R.L
Phone: +33 (0) 2 41 36 34 34
Fax: +33 (0) 2 41 36 35 00
E-mail: linak@linak.fr
Web: www.linak.fr

Germany
LINAK GmbH
Phone: +49 6043 9655 0
Fax: +49 6043 9655 60
E-mail: info@linak.de
Web: www.linak.de

India
LINAK A/S India Liaison Office
Phone: +91 120 4531797
Fax: +91 120 4786428
E-mail: info@linak.in
Web: www.linak.in

Ireland
LINAK UK Limited (Ireland)
Phone: +44 (0)121 544 2211
Fax: +44 (0)121 544 2552
+44 (0)796 855 1606 (UK Mobile)
+35 387 634 6554 (Rep.of Ireland Mobile)
E-mail: sales@linak.co.uk
Web: www.linak.co.uk

Italy
LINAK ITALIA S.r.l.
Phone: +39 02 48 46 33 66
Fax: +39 02 48 46 82 52
E-mail: info@linak.it
Web: www.linak.it

Japan
LINAK K.K.
Phone: 81-45-533-0802
Fax: 81-45-533-0803
E-mail: linak@linak.jp
Web: www.linak.jp

Malaysia
LINAK Actuators Sdn. Bhd.
Phone: +60 4 210 6500
Fax: +60 4 226 8901
E-mail: info@linak-asia.com
Web: www.linak.my

Netherlands
LINAK Actuator-Systems B.V.
Phone: +31 76 5 42 44 40 /
+31 76 200 11 10
E-mail: info@linak.nl
Web: www.linak.nl

New Zealand
LINAK New Zealand Ltd
Phone: +64 9580 2071
Fax: +64 9580 2072
E-mail: nzsales@linak.com.au
Web: www.linak.com.au

Norway
LINAK Norge AS
Phone: +47 32 82 90 90
E-mail: info@linak.no
Web: www.linak.no

Poland
LINAK Polska
LINAK Danmark A/S (Spólka Akcyjna)
Phone: +48 22 295 09 70 /
+48 22 295 09 71
E-mail: info@linak.pl
Web: www.linak.pl

Republic of Korea
LINAK Korea Ltd.
Phone: +82 2 6231 1515
Fax: +82 2 6231 1516
E-mail: info@linak.kr
Web: www.linak.kr

Slovakia
LINAK Slovakia S.R.O.
Phone: +421 51 7563 444
Web: www.linak.sk

Spain
LINAK Actuadores, S.L.u
Phone: +34 93 588 27 77
Fax: +34 93 588 27 85
E-mail: esma@linak.es
Web: www.linak.es

Sweden
LINAK Scandinavia AB
Phone: +46 8 732 20 00
Fax: +46 8 732 20 50
E-mail: info@linak.se
Web: www.linak.se

Switzerland
LINAK AG
Phone: +41 43 388 31 88
E-mail: info@linak.ch
Web: www.linak.ch - www.fr.linak.ch
www.it.linak.ch

Taiwan
LINAK (Shenzhen) Actuator systems Ltd.
Taiwan Representative office
Phone: +886 2 272 90068
Fax: +886 2 272 90096
E-mail: sales@linak.com.tw
Web: www.linak.com.tw

Turkey
LINAK İth. İhr. San. ve Tic. A.Ş.
Phone: + 90 312 4726338
Fax: + 90 312 4726635
E-mail: info@linak.com.tr
Web: www.linak.com.tr

United Kingdom
LINAK UK Limited
Phone: +44 (0)121 544 2211
Fax: +44 (0)121 544 2552
E-mail: sales@linak.co.uk
Web: www.linak.co.uk

**DISTRIBUTORS**

Argentina
Novotec Argentina SRL
Phone: 011-4303-8989 / 8900
Fax: 011-4032-0184
E-mail: info@novotecargentina.com
Web: www.novotecargentina.com

Colombia
MEM Ltda
Phone: +[57] (1) 334-7666
Fax: +[57] (1) 282-1684
E-mail: servicioalcliente@memltda.com.co
Web: www.mem.net.co

India
Mechatronics Control Equipments India Pvt Ltd
Phone: +91-44-28558484, 85
E-mail: bala@mechatronicscontrol.com
Web: www.mechatronicscontrol.com

Indonesia
PT. Himalaya Everest Jaya
Phone: +6 221 544 8956 /+6 221 544 8965
Fax: +6 221 619 1925
Fax (Sales): +6 221 619 4658
E-mail: hejplastic-div@centrin.net.id
Web: www.hej.co.id

Israel
NetivTech LTD
Phone: +972 55-2266-535
Fax: +972 2-9900-560
Email: info@NetivTech.com
Web: www.netivtech.com

Singapore
Servo Dynamics Pte Ltd
Phone: +65 6844 0288
Fax: +65 6844 0070
E-mail: servodynamics@servo.com.sg

South Africa
Industrial Specialised Applications CC
Phone: +27 011 466 0346
E-mail: gartht@isagroup.co.za
Web: www.isaza.co.za

United Arab Emirates
Mechatronics
Phone: +971 4 267 4311
Fax: +971 4 267 4312
E-mail: mechtron@emirates.net.ae

**Terms of use**

LINAK® takes great care to provide accurate and up-to-date information about its products. However, it is the responsibility of the user to determine the suitability of LINAK products for any specific application. Due to ongoing product development, LINAK products are subject to continuous modifications and changes. LINAK reserves the right to make such modifications, updates, and changes without prior notice. For this reason, LINAK cannot guarantee the accuracy or current status of printed information about its products.

LINAK uses its best efforts to fulfil orders. However, for the reasons mentioned above, LINAK cannot guarantee availability of any particular product at any given time. LINAK reserves the right to discontinue the sale of any product displayed on its website or listed in its catalogues or in other written material created and produced by LINAK, LINAK subsidiaries, or LINAK affiliates.
All sales are subject to the applicable terms and conditions of sale and delivery available on LINAK websites. LINAK and the LINAK logotype are registered trademarks of LINAK A/S. All rights reserved.

Copyright© LINAK • 2026-09 • LIT-62-02-135 B

WE IMPROVE YOUR LIFE