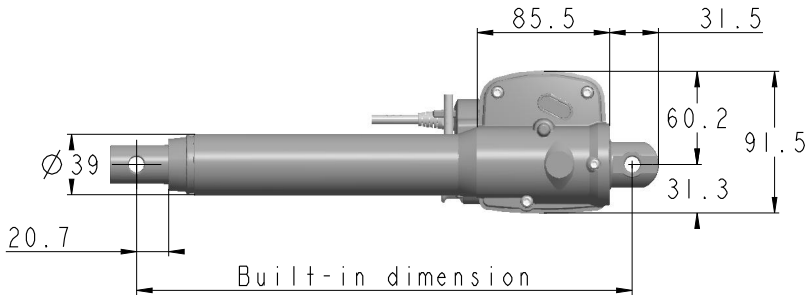

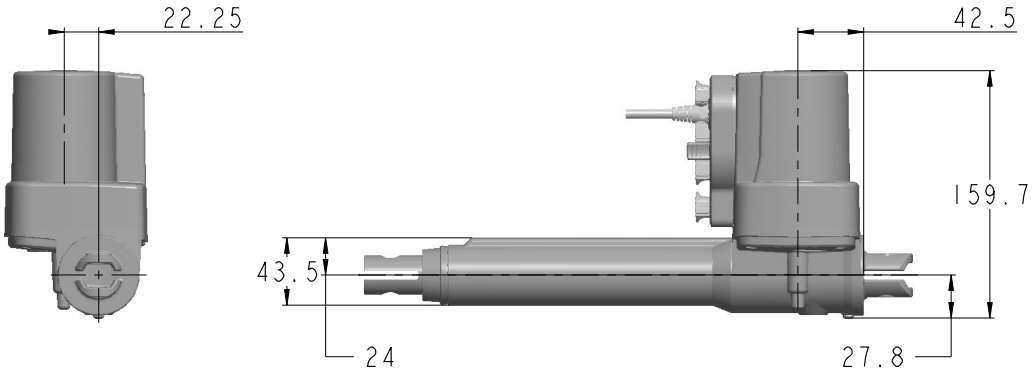

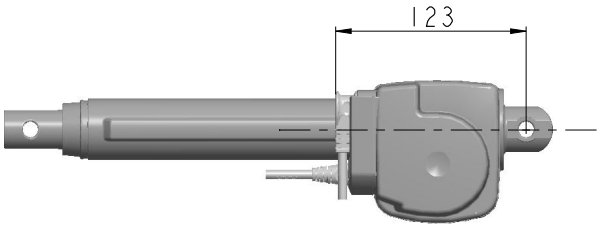

All rights reserved

Date:
24 February 2026

Description:

Linear Actuator LA24 ICA

LINAK®
WE IMPROVE YOUR LIFE