MEDLINE® CARELINE®
IMPROVING EFFICIENCY IMPROVING EFFICIENCY

Linear Actuators
User Manual

LINAK.COM/MEDLINE-CARELINE

LINAK®
WE IMPROVE YOUR LIFE

Contents

Preface **4**
GENERAL ASSEMBLY INSTRUCTIONS **5**
DECLARATION OF INCORPORATION OF PARTLY COMPLETED MACHINERY **6**
Important information **7**
General warnings **8**
General recommendations **11**
General Regulatory Considerations **12**
General warranty periods **12**
Electromagnetic Compatibility (EMC) **13**
EMC Warnings 13
EMC responsibilities for LINAK actuator systems 14
Electrostatic discharge (ESD) 15
RF transmitter/receiver properties 16
FCC and IC Statements 16
Symbols **17**
Batteries **19**
General battery warnings 19
Lithium ion batteries 20
Lead acid batteries 23
System description **24**
Connecting the system **24**
General mounting of actuators **25**
General environmental conditions **26**
Information on start-up, deinstallation and operation **27**
Before installation, deinstallation or troubleshooting 27
Before start-up 27
During operation 27
Cleaning **28**
Cleaning warnings 28
IPX6 Washable 29
Rinsing aids 30
IPX6 Washable DURA™ 31
Cable wash 32
General maintenance **33**
Maintenance of all LINAK actuators 33
Repair and disposal **34**
Troubleshooting **35**

KA19 ..... **36**
KA30 ..... **41**
KA30 ICA **49**
KA30 Open Spindle **55**
KA30 Patient Lift **61**
LA20 Inline **66**
LA23 ..... **74**
LA24 ..... **87**
LA24 ICA **91**
LA27 ..... **97**
LA28 ..... **103**
LA28 Compact **105**
LA29 ..... **106**
LA30 ..... **109**
LA31 ..... **112**
LA34 ..... **119**
LA40 ..... **125**
LA42 ..... **136**
LA44 ..... **139**
Contacts **144**

Preface

Dear User,

We are delighted that you have chosen a LINAK® product.

LINAK systems are high-tech products based on many years of experience in the manufacture and development of actuators, lifting columns, desk frames, electric control boxes, controls, batteries, accessories and chargers.

This User Manual does not address the end user. It is intended as a source of information for the equipment or system manufacturer only, and it will tell you how to install, use and maintain your LINAK product/system. The manufacturer of the end product has the responsibility to provide a User Manual where relevant safety information from this manual is passed on to the end user.

We are convinced that your LINAK system will give you many years of problem-free operation.

Before our products leave the factory they undergo full function and quality testing. Should you, nevertheless, experience problems with your product/system, you are always welcome to contact your local supplier.

LINAK subsidiaries and some distributors situated all over the world have authorised service centres, which are always ready to help you.

LINAK provides a warranty on all products (see warranty section).

This warranty, however, is subject to correct use in accordance with the specifications, maintenance being done correctly and any repairs being carried out at a service centre, which is authorised to repair LINAK products.

Changes in installation and use of LINAK systems can affect their operation and durability. The products are only to be opened by authorised personnel.

This User Manual has been written on the basis of the present technical knowledge. LINAK is constantly keeping the information updated and we therefore reserve the right to carry out technical modifications.

The introductory pages of this manual may contain information that is not applicable to the technical product pages and are to be seen as general information for all LINAK products.

LINAK A/S

GENERAL ASSEMBLY INSTRUCTIONS

Please read the following safety information carefully. Ensure that all staff who are to connect, mount, or use the actuator are in possession of the necessary information and that they have access to this assembly instruction.

Persons who do not have the necessary experience or knowledge of the product/products must not use the product/products. Besides, persons with reduced physical or mental abilities must not use the product/products, unless they are under surveillance or they have been thoroughly instructed in the use of the apparatus by a person who is responsible for the safety of these persons. Moreover, children must be under surveillance to ensure that they do not play with the product.

Warnings

Failure to comply with these instructions may result in accidents involving serious personal injury.

It is important for everyone who is to connect, install, or use the systems to have the necessary information and access to the User Manual on www.linak.com.

- If there is visible damage on the product it must not be installed.
- If the control box / Twindrive makes unusual noises or smells, switch off the mains voltage immediately.
- The products must only be used in an environment that corresponds to their IP protection.
- The cleaners and disinfectants must not be highly alkaline or acidic (pH value must be 6 to 8).
- Irrespective of the load, the duty cycle stated in the data sheets, must NOT be exceeded.
- The DESKLINE® systems can only be used in push applications.
- The control box / Twindrive must only be connected to the voltage stated on the label.
- System not specified for pull must only be used in push applications.
- Fastening screws and bolts must be tightened correctly.
- Do not open the closing device on the Twindrive during operation.
- Specifications on the label must under no circumstances be exceeded.
- NOT TO BE OPENED BY UNAUTORISED PERSONNEL.
- Use only the actuator within specified working limits.
- Note that during construction of applications, in which the actuator is to be fitted, there must be no risk of personal injury, such as squeezing of fingers or arms.
- If irregularities are observed, the actuator must be replaced.
- If the actuator is used for pull in an application where personal injury can occur, the following is valid: It is the application manufacturer's responsibility to incorporate a suitable safety arrangement, which will prevent personal injury from occurring, if the actuator should fail.
- MEDLINE® & CARELINE® products products are rated to operate at an altitude < 2000 m.

Recommendations

Failure to follow these instructions can result in the actuator being damaged or being destroyed.

- Before you start mounting/dismounting, ensure that the following points are observed:
  - The actuator is not in operation.
  - The mains current supply is switched off and the plug has been pulled out.
  - The actuator is free from loads that could be released during this work.
- Before you put the actuator into operation, check the following:
  - The actuator is mounted correctly as indicated in the relevant user instructions.
  - The equipment can be freely moved over the actuator's whole working area.
  - The actuator is connected to a mains electricity supply/transformer with the correct voltage and which is dimensioned and adapted to the actuator in question.
  - Ensure that the voltage applied matches the voltage specified on the actuator label.
  - Ensure that the connection bolts can withstand the wear.
  - Ensure that the connection bolts are secured safely.
- During operation
  - Listen for unusual sounds and watch out for uneven running. Stop the actuator immediately if anything unusual is observed.
  - Do not side load the actuator.
  - Use only the actuator within the specified working limits.
  - Do not kick or step on the actuator.
- When the equipment is not in use
  - Switch off the mains supply or pull out the plug in order to prevent unintentional operation.
  - Check regularly the actuator and joints for extraordinary wear.
- Note: If the actuator is operated as a hand crank, it must be operated by hand, otherwise there is a risk of overloading the actuator and hereby damage the actuator.
  When changing the cables on a LINAK actuator, it is important that this is done carefully, in order to protect the plugs and pins.
  Please ensure that the plug is in the right location and fully pressed in before mounting the cable lid.

DECLARATION OF INCORPORATION OF PARTLY COMPLETED MACHINERY

LINAK A/S
Smedevænget 8
DK - 6430 Nordborg

LINAK A/S hereby declares that LINAK DESKLINE® products, characterised by the following models and types:

Control Boxes	CBD6S
Linear Actuators	DB5, DB6, DB14, LA23, LA31
Lifting Columns	DL1A, DL2, DL4S, DL5, DL6, DL8, DL9, DL10, DL11, DL12, DL14, DL15, DL16, DL17, DL18, DL19, DL20, DL21, BASE1, LC1
Desk Panels	DPA, DPB, DPH, DPF, DPG, DPT, DP1CS, DPI
Wireless Controls	BP10
Frames and Feet	Kick & Click, DF2, DF3, DF4, DF5, DLF
Accessories	BA001, BLE2LIN, CHUSB, DESK Sensor, SLS, SMPS, USB2LIN, WiFi2LIN, DC Connector, RFRL

LINAK A/S hereby declares that LINAK HOMELINE® products, characterised by the following models and types:

Control Boxes	CBD6DC
Linear Actuators	LA10, LA18, LA40 HOMELINE, BASE1
Dual Actuators	TD4, TD5
Controls	BP10, HC10, HC20, HC40, HC50, HC60
Accessories	BA002, CP, BLE2DC, BLE2LIN, LED Light Rail, MD1, SMPS, WiFi2LIN

LINAK A/S hereby declares that LINAK MEDLINE® & CARELINE® products, characterised by the following models and types:

Control Boxes	CA20, CA30, CA40, CA63, CAL40, CB6, CB6S, CB6P2, CB8, CB9, CBJ2, CBJ Care, CBJ Home, CO11, CO40, CO41, CO53, CO61, CO65, CO71, COL50, OPS, PJ2
Linear Actuators	KA19, KA30, KA30 ICA, LA20, LA23, LA24, LA24 ICA, LA27, LA28, LA29, LA30, LA31, LA34, LA40, LA42, LA44, LA54
Lifting Columns	BL1, LC1, LC3
Controls	ABL, ACC, ACK, ACO, ACOD, ACOM, ACL, DP, DPH, FS, FS3, FPP, HB30, HB70, HB80, HB100, HB190, HB200, HB400, HD80, HD600, HL70, HL400, SC01
Accessories	BA15, BA16, BA18, BA19, BA22, BAJ, BAJL, BAL40, BAL50, CH01, CHJ2, CHL40, CHL50, DJB, LIN2OB, MJB2, MJB5 Plus, Massage Motor, PJB4, QLCI2, SLS, SMPS10, UBL, UBL2, UBL4 Motion, USB-A Power Adapter

LINAK A/S hereby declares that LINAK TECHLINE® products, characterised by the following models and types:

Linear Actuators	LA12, LA14, LA21, LA23, LA25, LA30, LA33, LA35, LA36, LA37, LA73, LA76, LA77
Lifting Columns	LC3 IC
Accessories	FMB

comply with the following parts of the Machinery Directive 2006/42/EC, ANNEX I, Essential health and safety requirements relating to the design and construction of machinery: 1.5.1 Electricity supply

The relevant technical documentation is compiled in accordance with part B of Annex VII and this documentation or part hereof will be transmitted by post or electronically to a reasoned request by the national authorities.

This partly completed machinery must not be put into service until the final machinery into which it is to be incorporated has been declared in conformity with the provisions of the Machinery Directive 2006/42/EC where appropriate.

Nordborg, 2026-08-11

LINAK A/S
John Kling, B.Sc.E.E., Certification and Regulatory Affairs
Authorised to compile the relevant technical documentation

Original declaration

Copyright© LINAK • 2026-08 • LIT-09-02-001 G

Important information

LINAK® products, within the scope of this manual, are not classified as medical electrical equipment or systems, nor do they fall within the scope of the EU Medical Device Directive/Regulation or other similar national regulations. The products are components to be built into a piece of medical electrical equipment by a manufacturer.

To support the assessment and certification task of the complete medical electrical equipment or system worldwide, LINAK provides certification, on a component level, according to the IEC 60601-1, (Medical electrical equipment – Part 1: General requirements for basic safety and essential performance) as recognised components by NRTL (Nationally Recognized Testing Laboratories).

Description of the various signs used in this manual:

Warnings

Failure to comply with these instructions may result in accidents involving serious personal injury.

Recommendations

Failing to follow these instructions can result in product damage.

Please read the following safety information carefully:

Ensure that all staff who are to connect, mount, or use the actuator system are in possession of the necessary information and that they have access to these assembly instructions.

Persons who do not have the necessary experience or knowledge of LINAK products should not use these. Moreover, persons with reduced physical or mental abilities must not use the products, unless they are under surveillance or they have been thoroughly instructed in the use of the equipment by a person who is responsible for the safety of these persons. Moreover, children must be under surveillance to ensure that they do not play with the product.

Please be aware that LINAK has taken precautions to ensure the safety of the actuator system. The manufacturer/OEM is responsible for the overall approval of the complete application.

LINAK recommends to use the actuators in push applications rather than pull applications.

LINAK actuators are not to be used for repeated dynamic push-to-pull movements.

For general pull applications or repeated dynamic push-to-pull movements in the application, please contact LINAK A/S if in doubt.

LINAK actuators and electronics generally fall outside the IEC 60601-1 definition of applied parts and are not marked as such.

However, assessing the risk whether actuators and electronics can unintentionally come into contact with the patient, determines that they are subject to the requirements for applied parts. All the relevant requirements and tests of the standard are carried out as part of the IEC CB* Scheme/NRTL** assessment.

* CB: Certification Body

**NRTL: Nationally Recognised Testing Laboratory

General warnings

Failure to comply with these instructions may result in accidents involving serious personal injury:

The medical device manufacturer is responsible for the incorporation of a suitable safety arrangement, if the actuator or lifting column is used for pull in an application where personal injury can occur, which will prevent personal injury from occurring in case of actuator failure.

Note that during construction of applications, in which the actuator is to be fitted, there must be no possibility of personal injury, for example the squeezing of fingers or arms.

The plastic parts in the system cannot tolerate cutting oil.

Assure free space for movement of the application in both directions to avoid a blockade.

The application and actuators are only to be operated by instructed personnel.

In applications with spline function, the blockage by an obstacle when the application is moving inwards, the removal of the obstacle will cause the load to drop until the spindle hits the nut.

Do not turn the outer tube.

Do not use chemicals.

Inspect the actuator system regularly for damage and wear.

Do not expose LINAK actuator system components to high intensity ultraviolet radiation disinfection lamps. This may damage the enclosure, supporting parts and cables.

LINAK actuators and electronics are not designed for use within the following fields:

- In the presence of a flammable anesthetic mixture with air or with oxygen or nitrous oxide
- Planes and other aircrafts
- Explosive environments
- Nuclear power generation

If faults are observed, the products must be replaced.

A LINAK control box, actuator and accessory component must, in the final application, be placed where it is not exposed to any impact. This is to prevent damage if a passer-by accidentally hits it with an object or when cleaning the floor with a broom or a mop. On a medical bed e.g. this might be underneath the mattress support platform. If necessary to mitigate this risk, additional protection might be required.

To avoid unintended movement, prevent foreign objects or persons from unintentionally activating a footswitch or a hand control at any time, for instance during normal use or maintenance.

If there is visible damage on the product it should not be installed.

If the actuator system makes unusual noise or smells, switch off the mains voltage immediately and disconnect batteries, if applicable.

The products must only be used in an environment that corresponds to their IP protection class.

The cleaners and disinfectants must not be highly alkaline or acidic (pH value 6-8). See cleaning section.

Irrespectively of the load, the duty cycle stated on the product label must NOT be exceeded.

The control box must only be connected to the voltage stated on the label.

Systems not specified for pull must only be used in push applications.

Fastening screws and bolts must be tightened correctly.

Specifications on the product label must under no circumstances be exceeded.

NOT TO BE OPENED BY UNAUTHORISED PERSONS.

Only use the actuator within specified working limits.

Be aware that during the design of medical devices, the risk of personal injury (for instance squeezing of fingers or arms) must be minimised.

If irregularities are observed, the actuator must be replaced.

All cables must be mounted in such a way that they are not trapped or exposed to tension or sharp objects when the application is moved in different directions.

General recommendations

Failing to follow these instructions may result in actuator system damage:

The duty cycle printed on the actuator system label must always be respected. If exceeded, there is a risk that the actuator system is damaged. Unless otherwise specified on the label, the duty cycle is max. 10%, max. 2 min. in use followed by 18 min. not in use.

All detachable connections between components must be locked by the cable locking mechanism - when applicable.

It is recommended to have options like quick release, manual lowering or similar built into the system in case of power loss or system failure or if movement of the system is critical. After service it is recommended to test the system for correct functionality before it is put back into operation.

Prior to assembly/disassembly, ensure that the following points are observed:

- The actuator system is not in operation.
- The mains current supply is switched off and the plug has been pulled out.
- Batteries - if applicable - may also power the system.
- Actuators are free from loads that could be released during this work.

Prior to operating the actuator system, check the following:

- Actuator system components are correctly mounted as indicated in the product-specific user instructions.
- The equipment can be operated in its entire intended range of movement.
- Ensure that the load-supporting bolts can withstand the wear.
- Ensure that the load-supporting bolts are secured safely.

During operation:

- Listen for unusual sounds and watch out for uneven movement. Stop the actuator system immediately if anything unusual is observed.
- Do not sideload the actuator.
- Do not step on or kick any LINAK component.

When the equipment is not in use:

- Switch off the mains supply or pull out the plug in order to prevent unintentional operation.

Cables and plugs:

- It is important to remove the transport plastic bag before using the cable.
- When changing the cables on a LINAK® actuator system, it is important that this is done carefully in order to protect the plugs and pins.
- Please ensure that the plug is in the right location and properly inserted before the cable lid is mounted.

General Regulatory Considerations

Certain LINAK components are not individually certified under IEC 60601-1 due to incomplete constructional features that prevent full compliance. Specifically, products without enclosures, such as for instance those exposing printed circuit boards or mechanical parts, do not meet the safety requirements outlined in the standard.

Medical equipment must comply with strict regulations to ensure the safety of patients and healthcare professionals.

When LINAK components are integrated into a medical device, it is the responsibility of the medical device manufacturer to ensure that these components are adequately enclosed.

Ultimately, the medical device manufacturer is responsible for ensuring that the final product complies fully with IEC 60601-1 and all other applicable standards.

General warranty periods

As general warranty period, LINAK provides 5 years (60 months) warranty on MEDLINE and CARELINE products used in beds and medical applications. If MEDLINE and CARELINE products are used in other applications, they will be covered by 1½ years (18 months) warranty.

Batteries are covered by a specific product warranty of 12 months.

External products that are not manufactured by LINAK A/S: 12 months are added to the warranty period, for instance for transportation and stocking. Relabelling of these products only takes place, if the production date exceeds one year from the date of dispatch to the customer.

If there is any doubt whether returned products are covered by the warranty, they are covered by the warranty. Please use the date of the control box or actuator as reference, if possible.

Electromagnetic Compatibility (EMC)

EMC Warnings

Electromagnetic compatibility – general

LINAK® actuator systems bear the CE marking as an attestation of compliance with the EMC Directive 2014/30/EU. The systems are designed to meet all requirements of applicable standards and have been tested to meet IEC 60601-1-2 requirements.

Emission:

LINAK Actuator Systems are CISPR 11, Group 1, Class B products, comply with IEC 61000-3-2, Class A and IEC 61000-3-3.

Immunity:

Test levels are according to Professional Healthcare Facility and Home Healthcare Facility Environment.

Electromagnetic phenomena are evaluated on a system level, with the actuator connected to a LINAK control box and accessories.

LINAK always recommends to perform verification tests on the final medical device.

Electromagnetic compatibility – third party components

Use of accessories, transducers and cables other than those specified by LINAK could result in increased electromagnetic emissions or decreased electromagnetic immunity of the actuator system and result in improper operation.

Electromagnetic compatibility – interference with other equipment in general

Use of the actuator system adjacent to or stacked with other equipment should be avoided as this could result in improper operation. If such use is necessary, the actuator system and the other equipment should be observed to verify that they are operating properly.

If the user notes unusual behavior of the actuator system, in particular if such behaviour is intermittent and associated with the standing right next to mobile phones, microwaves and radio broadcast masts, this could be an indication of electromagnetic interference.

If such behaviour occurs, try to move the actuator system further away from the interfering equipment.

Electromagnetic compatibility – interference with other equipment, RF communications

RF communication equipment (e.g. RFID, wireless RF etc. including peripherals such as antenna cables and external antennas) should be used at a distance no closer than 30 cm (12 inches) to any part of the actuator system. This also applies to cables specified by the manufacturer. Otherwise, a performance degradation of this equipment could result.

EMC responsibilities for LINAK actuator systems

LINAK verifies the EMC performance of each LINAK product and approves them individually. The LINAK products can be combined and integrated into many different systems. LINAK also verifies the system EMC performance on commonly used combinations.

LINAK has certificates in accordance with applicable standards for each product and provides the customers, who are building the application and integrating these products into systems (systems with control box, actuators, cables, batteries, etc.), with these certificates.

However, EMC testing of LINAK products in generic LINAK systems is not made in an environment that corresponds to the specific application environment which differs from the generic testing environment. There will be differences that can affect the EMC performance in the specific target application.

The customer is responsible for qualifying and approving the complete application including the LINAK system.

Regulatory standard

LINAK products, being components to be incorporated by a Manufacturer [definition: IEC 60601-1 ed.3.1, cl. 3.55] into Medical Electrical Equipment [definition: IEC 60601-1 ed.3.1, cl. 3.63], are tested concerning the EMC phenomena according to the Collateral Standard IEC 60601-1-2 ed. 4.1.

IEC 60601-1-2 ed. 4.1 sets forth the requirements for the electromagnetic compatibility of Medical Electrical Equipment, ensuring that devices operate safely and effectively within their intended environments. Compliance with this standard is essential to minimize electromagnetic interference and maintain the integrity and performance of Medical Devices.

Furthermore, IEC 60601- 1-2 ed. 4.1 states:

"This collateral standard recognizes that the Manufacturer has the responsibility to design and perform Verification of Medical Electrical Equipment and Medical Electrical Systems to meet the requirements of this Collateral Standard and to disclose information to the Responsible Organization or Operator so that the Medical Electrical System will remain safe throughout its Expected Service Life."

Qualification process of a new application

The qualification process for a new application is normally done in cooperation between the customer and LINAK. LINAK provides the relevant support, competence and documentation needed for the customer's overall development plan and test plan for the specific application.

The driver of the qualification process is the customer who has the ultimate application responsibility (MDS). The customer identifies and specifies the needed testing based on many different parameters (experience, risk management, requirements from standards, etc.).

In many cases, the customer is establishing and verifying tests early in the project to ensure that the approval process has a low risk of failing when tested in the approval institute.

The customer identifies which tests to make and when they are to be performed in the project to mitigate the risk of failure in the approval process which also includes EMC testing.

Electrostatic discharge (ESD)

LINAK® considers ESD to be an important issue and years of experience have shown that equipment designed to meet the levels specified in standards might be insufficient to protect electronic equipment in certain enviroments.

1. Handling and mounting electrostatic discharge sensitive devices (ESDS devices).

- Handling of sensitive components shall only take place in an ESD Protected Area (EPA) under protected and controlled conditions.
- Wrist straps and/or conductive footwear (personal grounding) shall always be used when handling ESDS devices.
- Sensitive devices shall be protected outside the EPA by the use of ESD protective packaging.

2. Responsibility LINAK/customer

- ESDS devices must under no circumstances, during transport, storage, handling, production or mounting in an application, be exposed to harmfull ESD.
- LINAK can only guarantee the lifetime of ESDS devices if they are handled in the same way from production at LINAK A/S until they are mounted in the manufacturer's application. It is therefore important that the ESDS devices are not removed from the ESD protected packaging before they are physically within the EPA area at the customer premises.

Please refer to EN61340 for further information:

EN61340-5-1, Electrostatics - Protection of electronic devices from electrostatic phenomena - General requirements

EN61340-5-2, Electrostatics - Protection of electronic devices from electrostatic phenomena - User guide

RF transmitter/receiver properties

Some LINAK products emit RF-power by intention for communication purposes.

Frequency band of transmission: 2402 MHz - 2480 MHz

Type: Bluetooth® Low Energy

Modulation: GFSK

Maximum Effective Radiated Power (ERP): 10 dBm

FCC and IC Statements

For RF-emitting products (e.g. Bluetooth®, Wi-Fi) intended to be used on the North American continent, the following applies:

FCC statement

NOTE: This equipment has been tested and found to comply with the limits for a Class B digital device, pursuant to part 15 of the FCC Rules. These limits are designed to provide reasonable protection against harmful interference in a residential installation. This equipment generates uses and can radiate radio frequency energy and, if not installed and used in accordance with the instructions, may cause harmful interference to radio communications. However, there is no guarantee that interference will not occur in a particular installation. If this equipment does cause harmful interference to radio or television reception, which can be determined by turning the equipment off and on, the user is encouraged to try to correct the interference by one or more of the following measures:

- Reorient or relocate the receiving antenna.

- Increase the separation between the equipment and receiver.

- Connect the equipment into an outlet on a circuit different from that to which the receiver is connected.

- Consult the dealer or an experienced radio/TV technician for help

Changes or modifications not expressly approved by the party responsible for compliance could void the user's authority to operate the equipment.

This device complies with Part 15 of the FCC Rules. Operation is subject to the following two conditions:

(1) this device may not cause harmful interference, and

(2) this device must accept any interference received, including interference that may cause undesired operation.

IC statement

This device contains licence-exempt transmitter(s)/receiver(s) that comply with Innovation, Science and Economic Development Canada's licence-exempt RSS(s). Operation is subject to the following two conditions:

(1) This device may not cause interference.

(2) This device must accept any interference, including interference that may cause undesired operation of the device.

L'émetteur/récepteur exempt de licence contenu dans le présent appareil est conforme aux CNR d'Innovation, Sciences et Développement économique Canada applicables aux appareils radio exempts de licence. L'exploitation est autorisée aux deux conditions suivantes :

(1) L' appareil ne doit pas produire de brouillage;

(2) L' appareil doit accepter tout brouillage radioélectrique subi, même si le brouillage est susceptible d' en compromettre le fonctionnement.

Symbols

The following symbols are used on the LINAK product labels, where applicable:

	IEC 60417-5172: Class II equipment		Compliance to all relevant EC directives
	IEC 60417-5840: Applied part type B		UK Conformity Assessment
	IEC 60417-5019: Class I equipment Protective earth; protective ground		Regulatory compliance mark: The Australian Safety/EMC Regulations
	IEC 60417-5002: Positioning of cell		Alternating current
	ISO 7000-0434A: Caution, consult accompanying document		Direct current
	ISO 7000-1641 Operating instructions	XXXXXX	Reduced ETL recognised component mark for Canada and the United States. X: The mark is always accompanied by a control number of 6 or 7 figures. For complete description, see ETL marking on next page.
	Electronics scrap		
	Electronics scrap		Bluetooth®
Li-ion	Recycle		Japanese TELEC
c US	Recognised Component mark for Canada and the United States		
PSE	PSE diamond mark		
PSE	PSE circle mark		

Electrical Testing Laboratories (ETL) marking

Due to space limitations, the complete ETL marking demands are not represented on the marking plates.

The full ETL recognised component markings are shown here:

C/N 120690
Conforms to ANSI/AAMI Std. ES60601-1
Cert. to CSA Std. C22.2 No. 60601-1

C/N 4008004
Conforms to ANSI/AAMI Std. ES60601-1
Cert. to CSA Std. C22.2 No. 60601-1

C/N 4008838
Conforms to ANSI/AAMI Std. ES60601-1
Cert. to CSA Std. C22.2 No. 60601-1

C/N 9901916
Conforms to ANSI/AAMI Std. ES60601-1
Cert. to CSA Std. C22.2 No. 60601-1

C/N 4008005
Conforms to ANSI/AAMI Std. ES60601-1
Cert. to CSA Std. C22.2 No. 60601-1

C/N 4008671
Conforms to ANSI/AAMI Std. ES60601-1
Cert. to CSA Std. C22.2 No. 60601-1

C/N 4008003
Conforms to ANSI/AAMI Std. ES60601-1
Cert. to CSA Std. C22.2 No. 60601-1

C/N 4008623
Conforms to ANSI/AAMI Std. ES60601-1
Cert. to CSA Std. C22.2 No. 60601-1

C/N 4009507
Conforms to ANSI/AAMI Std. ES60601-1
Cert. to CSA Std. C22.2 No. 60601-1

Batteries

To comply with the EU Battery Regulation (EU) 2023/1542, battery-related information is provided through this QR code.

Scanning the QR code gives access to battery identification details, as well as safety and environmental information available on the LINAK website.

This information must also be included in the end-product user manual.

General battery warnings

Handle batteries carefully. Do not short circuit the battery.

Avoid continuous battery discharge when the medical device is not in use, as this may cause lead sulphate formation, which, if left in this state for too long, will irreversibly damage the battery.

LINAK battery packs may emit flammable gases. Do not expose the battery packs to fire or equipment that emits sparks. Moreover, do not store the battery in a closed environment or incorporate it into a closed structure of an enclosure as this may cause an explosion, fire, equipment damage, or injury.

Handle tools carefully and do not wear jewelery when handling batteries. A short-circuit of the battery terminals can cause burn injuries, damage or trigger explosions.

Only connect LINAK batteries to compatible chargers.

LINAK battery packs contain toxic substances. If the internal battery fluid leaks out and gets onto skin or clothing, make sure it is washed off with clean water. Moreover, if the fluid gets into the eyes, rinse them immediately with clean water and seek medical assistance.

Do not use or store LINAK battery packs in places where the ambient temperature exceeds 50 °C, such as inside a hot automobile, in direct sunlight, or in front of a stove or a source of intense heat. Doing so can shorten the battery life, lower its performance level, cause the battery to leak fluid, explode, cause fire, or be damaged.

Applications where batteries serve as backup and not as the main power source should always be connected to mains whenever possible.

Lithium ion batteries

Li-Ion batteries are moving in the direction of minimising the physical size and, at the same time, increasing the capacity. This gives a very compact battery with a high energy concentration. It also increases the risk of thermal runaway (see note below) due to internal short circuits.

The general use of Li-Ion batteries has increased, and the inherent risk of thermal runaway has led to stricter rules within the transport industry, specifically air transport with tightened restrictions on the quantity, handling, and storage of specific products.

The OEMs and consumers must recognise that although safe to use, Li-Ion cells always have a very small risk of thermal runaway. The risk could be as little as 1 PPM or even less.

LINAK currently bases our Li-Ion battery design on cell types with an industry-proven history (e.g. electric cars). The use of well-proven cell technology reduces the risk of thermal runaway, but it does not eliminate it. LINAK has completed activities to reduce this risk and the complete battery package is approved in accordance with UL.

An external, internationally recognised expert has also reviewed the design to ensure that it is manufactured according to the latest recommendations. Further to that, we only use cells from well-recognised manufacturers.

LINAK recommends that when using Li-Ion batteries, the customers should carry out proper risk analysis on their application. The risk analysis must also take into consideration that these products are not mounted in positions where they are in direct contact with flammable materials.

LINAK Li-Ion batteries have no greater risk of thermal runaway than other Li-Ion cells from well-recognised manufacturers within the market. Therefore, LINAK cannot take responsibility for any failures that occur due to a failure that is inherent in the nature of Li-Ion batteries.

If any of the Li-Ion batteries built into LINAK products are found to be defective under warranty, LINAK will provide the OEM with a new product. LINAK explicitly disclaims all other remedies. LINAK shall not in any event be liable under any circumstances for any special indirect punitive incidental or consequential damages or losses arising from any incident related to the inherent risk of thermal runaway in the Li-Ion cell and any use of LINAK products. Moreover, LINAK explicitly disclaims any responsibility for profit loss, failure to realise expected savings, any claim against our customer by a third party, or any other commercial or economic losses of any kind, even if LINAK has been advised of the possibility of such damages or losses.

Note: ‘Thermal runaway’ is overheating of a cell, and it could lead to a small fire and smoke from the cell.

Transportation

The lithium ion batteries must be packed and transported in accordance with applicable regulations. Always ask your local transportation provider how to handle the transportation of lithium ion batteries.

Please see the general assembly instructions and the mounting section for detailed information.

Warnings

When using Li-Ion batteries with patient lift control boxes, loss of power might happen due to the battery deep discharge protection. This will only happen in case of continuous battery use despite warnings. In this event, there may be no warning, and the application may not be able to move when expected.

In his risk analysis, the customer must take into consideration how to assure alternative means to make movement, for instance quick release or manual lowering.

Do not open the battery housing as damaging the cell or circuitry may develop excessive heat.

If product caution is not clearly visible at low light intensity, read the product label instructions symbol. A warning must be included in the application manufacturer manual for the medical device.

The application manufacturer must test the application and ensure that intentional and unintended operations do not exceed the battery specification limits.

Defective or damaged Li-Ion batteries are not allowed for transportation.

For safety reasons, please adhere to the indicated charging and operation temperature.

In case the battery is too hot, disconnect it, evacuate the room, and wait for 2 hours before taking further steps.

Mounting instructions must be followed in order to avoid exposing batteries to water.

In general, recharging of batteries must take place every 12 months. However, please note:

- New Li-Ion batteries, shipped from LINAK are in a deep-sleep state, where the self-discharge is very little
- When mounted in an application, LINAK Li-Ion batteries wake up, resulting in a higher rate of charge, depending on the application/system
- Application manufacturer must consider this idle consumption for his specific system and make precautions to avoid discharged batteries.
- Contact your LINAK sales team for further information

If batteries are to be shipped by air, they shall not be charged to more than 30%

Disposal of the battery takes place in accordance with local regulations.

Recommendations

- Do not exceed the storage temperature as it will shorten the product life and performance.
- Allow the battery to settle to room temperature before use.
- Lithium ion batteries are not intended for use in outdoor applications and indoor pool environments.
- If the battery is completely discharged, then recharge the battery before storage.
- Always use correct LINAK charger

DO NOT:

- Heat or burn the batteries.
- Expose the batteries to high impact/excessive force.
- Crush or puncture the batteries.
- Use batteries with signs of damage or corrosion.
- Charge or store the batteries near combustible material.
- Exceed IP-ratings.
- Overcharge or fully discharge the batteries.

Safety feature

Lithium ion batteries contain several mechanisms to protect themselves from being damaged due to excessive use. In case of overheating, the device will activate a thermal protection. No power output will be available until the temperature is again within normal operating range.

Overheating may occur by extensive use at high temperatures or when exceeding the duty cycle (see product label).

Lead acid batteries

Maintenance of batteries

Prior to first use of LINAK® batteries, please make sure that they are charged at least 24 hours and if possible even longer for proper functioning and prolonging the battery lifetime.

Replacement of batteries

The batteries must only be replaced by the same type of batteries or mechanical and electrical equivalent types. The batteries must be new or maintained by means of charging at least every 6 months. The batteries, which make a set, must be supplied with identical production codes.

Production code mismatch may lead to a severely reduced lifetime expectancy.

Before mounting, ensure that the battery set is correctly connected, compare with the drawing in the battery room and check that no connectors are loose.

Warnings in connection with battery replacement

Please observe the following maintenance, replacement, and disposal requirements to ensure a safe and reliable operation.

The batteries are to be replaced after 4 years at the latest. Perhaps earlier, depending on the pattern of use. Frequent and high-powered discharges reduce the battery life. For an optimum lifetime, the product must be connected to the mains voltage as often as possible. It is recommended that the batteries are to be charged for at least every 6 months - otherwise the batteries will have reduced capacity due to self-discharge. It is recommended to test the battery function at least once every year.

The battery compartment is hermetically separated from the electronics compartment. When replacing the batteries this separation must not be damaged or modified as this may allow penetration of battery gas into the electronics compartment with risk of explosion.

When replacing batteries in waterproof products (IPX5 and IPX6), precautions must be taken that the sealing material (silicone ring or joint filler) is not damaged and that it is correctly placed in the groove. Hereafter, the screws in the cover are to be fastened with approx. 1 Nm.
If necessary, replacement sealing is available at LINAK.

The battery compartment is supplied with ventilation that ensures correct and necessary airing of the battery compartment. This airing must not be blocked or covered as a positive pressure may occur with risk of explosion.

If the product has been exposed to mechanical overload (lost on the floor, collision/squeezing in the application or a powerful stroke), the product must be sent to an authorised workshop for control of the hermetic separation between the battery and electronics compartment.

Disposal

Lead acid batteries must be disposed of in the same way as car batteries. Alternatively, they may be returned to LINAK.

System description

LINAK® actuators, lifting columns and electronics have been developed for use in all places where a linear movement is required.

LINAK products can for example be used for:

- Adjustment of beds
- Patient lifts within the care and hospital sector
- Adjustment of dentist chairs/gynaecological chairs

Connecting the system

Do not connect the mains cable until all actuators and hand controls have been connected to the control box.

Start by connecting the hand control to the control box. The connection in the control box is marked with "HB".

Connect the different actuators to the different channels on the control box. Each channel is marked with a number (e.g. "1", "2", "3"…….).

Check that all plugs are well connected and firmly pushed into the connector. Due to the fact that LINAK® control boxes are designed for a high IP degree, a firm force can be required.

Connect the mains cable.

The actuators can now be operated by pressing a button on the hand control button.

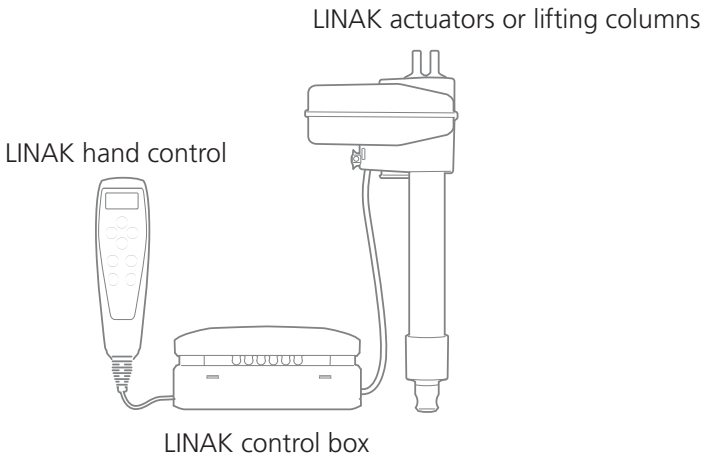

Any non-detachable power supply cord with mains plug is considered to be the disconnecting device.

Charging is only allowed in dry environment, and the appliance inlet must be thoroughly dried before connecting to mains.

General mounting of actuators

Do not use any other screws for the mounting brackets than those recommended by LINAK®. If longer screws are used, they will come into contact with the inner parts of the actuator. This will result in an irregular operation or even damage the actuator.

Be aware of the following during mounting and refer to the drawings below:

- Fixed to protect it against torque and bending.
- Fixed so that it is restrained, but free to move on its mountings.
- Fixed in brackets, which can take up the torque reaction.
- Mounted at right angles so that the right angle requirement is observed.
- Mounted with correct bolt dimension.
- Mounted with bolts and nuts made of high quality steel grade (for example 10.8). No thread on bolts inside the back fixture or the piston rod eye.
- Bolts and nuts must be protected from being able to fall out.
- Inspect the actuator for damage before mounting. A damaged actuator must not be mounted. Check for instance for damaged packaging.
- Do not use a too high tourque when mounting the bolts for the back fixture or the piston rod eye

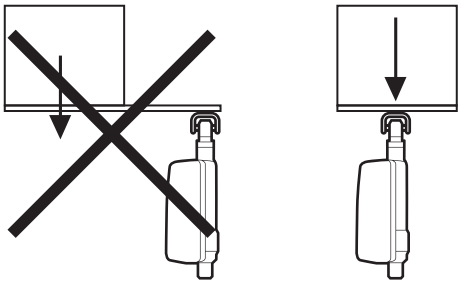

Figure 1

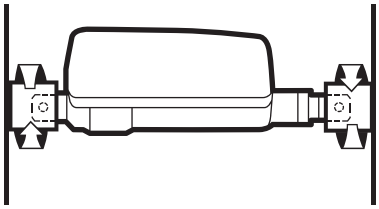

Figure 2

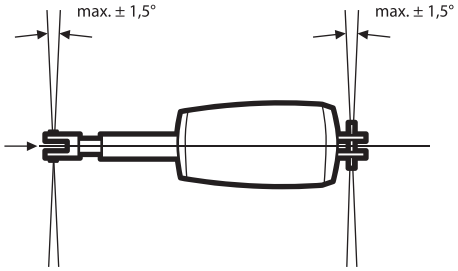

Figure 3

General environmental conditions

Operating, storage and transport	
Operating temperature Relative humidity Atmospheric pressure	+5 °C to +40 °C 20% to 80% - non-condensing 700 to 1060 hPa (Rated to be operated at an altitude ≤ 3000 m)
Storage temperature Relative humidity Atmospheric pressure	-10 °C to +50 °C 20% to 80% - non-condensing 700 to 1060 hPa (Rated to be stored at an altitude ≤ 3000 m)
Transport temperature Relative humidity Atmospheric pressure	-10 °C to +50 °C 20% to 80% - non-condensing 700 to 1060 hPa (Rated to be transported at an altitude ≤ 3000 m)
These values apply unless specified otherwise in the product-related texts.	

Information on start-up, deinstallation and operation

Before installation, deinstallation or troubleshooting

- Stop the actuator/lifting column.
- Switch off the power supply or pull out the mains plug and pull out the plug to the actuator/lifting column.
- Relieve the actuator/lifting column of any loads, which may be released during the work.

Before start-up

- Make sure that the system has been installed as instructed in the relevant product manual.
- The individual parts (actuator/lifting column/hand controls etc.) must be connected before the control box is connected to the mains.
- Make sure that the mains voltage to be connected to the product or the system is the one stated on the label.
- The equipment can be moved freely over the whole working area of the actuator/lifting column.
- Check correct function after mounting.
- The actuator/lifting column must not be loaded in excess of the values indicated in the specifications on the product label.
- The duty cycle noted on the product label must always be observed. Otherwise there is a risk of product damage. Exceeding the duty cycle will result in a dramatic reduction of the system lifetime.
- Unless specified otherwise on the product label, the duty cycle is max. 10%, max. 2 minutes in use followed by 18 minutes not in use.
- The actuator/lifting column system may only be used in an environment corresponding to the IP rating of the system. LINAK products are marked with the actual IP rating on the label.
- If the actuator is assembled in the application and is exposed to push or pull during transportation, the actuator can be damaged.
- If any individual parts are suspected to be damaged, do not install the parts, but return them for inspection/service.

During operation

- Check for unusual sounds and irregular movement. Stop the actuator/lifting column immediately if anything unusual is observed.
- If the control box makes unusual noises or smells, switch off the mains voltage immediately and the external battery, if any.
- Take care that the cables are not damaged.
- Unplug the mains cable on mobile equipment before it is moved.

Cleaning

The products can be cleaned as described in the following according to their IP protection stated on the product label.

The IP code specifies the protection degree provided by the enclosures. For most products, only the protection against ingress of water (second characteristic numeral) is specified, ingress of solid foreign objects or dust (first characteristic numeral) is not specified and therefore replaced by the letter X in the code. However, it should be noted that compliance with the requirements of IEC 60601-1 automatically allows to rate the medical equipment as IP2X because the requirements of IEC 60529 for this rating are the same as the accessibility requirements.

IP protection	Cleaning instructions
IPX0	Clean with a damp cloth
IPX1	Clean with a damp cloth
IPX2	Clean with a damp cloth
IPX3	Clean with a damp cloth
IPX4	Clean with a damp cloth
IPX5	Wash with a brush and water, but not water under pressure
IPX6	Wash with a brush and water. The water can be under pressure, but the system must not be cleaned directly with a high pressure cleaner. Max. 20 °C
IPX6 Washable according to IEC 60601-2-52	Clean by the use of wash tunnels according to IEC 60601-2-52
IPX6 Washable DURA™	Clean by the use of wash tunnels according to IEC 60601-2-52, extended washing cycle test

To avoid degreasing of the piston rod, the actuator should be retracted to minimum stroke and without load before washing.

Cleaning warnings

The systems must not be sprayed directly with a high pressure cleaner.

Interconnecting cables must remain plugged in during cleaning to prevent water ingress.

Cleaning with a steam cleaner is not permitted

UV cleaning is not permitted.

IPX6 Washable

LINAK® washable products frequently undergo a fully regulated washing test.

At LINAK, 'IPX6 Washable' means that the products conform only to this test.

Standard washing procedure

Reference: The standard IEC 60601-2-52 newest revision, which includes special demands to fundamental safety and relevant functional characteristics for hospital beds.
The demands for the washing process are described in the German "Maschinelle Dekontamination" from the organisation AK-BWA (Arbeitskreis Bettgestell- und Wagen-Dekotaminationsanlagen).

Description: At LINAK, the washing test takes place in an instrument washing machine, which is fitted and programmed in such a way that it duplicates the process used in a typical hospital installation for the cleaning of beds and other medical equipment.
During the test, the products are exposed to both thermal and chemical effects.
To avoid degreasing of the piston rod, the actuator should be retracted to minimum stroke and without load before washing.

Preparation: As plastic materials to a larger or lesser degree change characteristics and shape with time and climatical exposure, an ageing of the products is carried out first. The conditions for ageing are 65 °C +/- 2 °C in normal dry air for 10 days followed by a minimum of 16 hours at room temperature before the washing process starts.

Water: Degree of hardness, no more than 5° dH and no demineralised water.

Detergents: **LINAK recommends the following products:**

Sekumatic FDR or FRE from Ecolab

Neodisher Dekonta from Dr. Weigert

Thermosept NDR from Schülke or similar with a pH-value of 5 - 8 and in a concentration of 0.5 %

Rinsing aids

LINAK® recommends the following products:

- Sekumatic FKN from Ecolab
- Neodisher BP or TN from Dr. Weigert
- Thermosept BSK from Schülke or similar with a pH-value of 5 - 8 and in a concentration of 0.2 %.

Demands to chemicals:

- They must not contain caustic solutions
- They must not change the surface structure or adhesive properties of the plastic
- Must not break down grease

LINAK washing profile according to IEC 60601-2-52

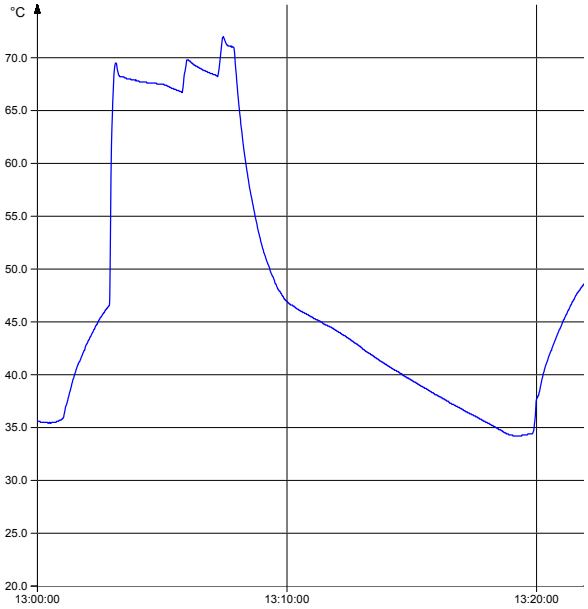

LINAK washing machine

IPX6 Washable DURA™

Description of washing test

LINAK washable products frequently go through a fully controlled washing test. The LINAK term "IPX6 Washable DURA" signifies that the products conform exclusively to this test.

The "IPX6 Washable DURA" washing test is used to ensure that products that are rated "IPX6 Washable DURA" comply with the agreed terms and conditions. This washing test differs from the norm EN60601-2-52 as the products are not aged and each washing cycle is followed by a 30 minute cooling process.

Further information regarding the washing process can be found in the German document "Maschinelle Dekontamination" from the organisation AK-BWA.

Estimated time consumption: Approximately 1 month.

Amount of samples: During the development process, the number of tested samples is in accordance with GP082. During running production, the number of tested samples complies with UM-41-22-001.

General: The process applies to the IPX6 Washable DURA system.

Test conditions:

- The units are not aged.
- Products with adhesive foils must be hardened before ageing.
- The hardening time depends on the used adhesive, but is typically 3 days at 20°C.
- The units are washed with new plugs/cables.
- The cables should be as long as possible and free ends should be shut off.
- Detergent and rinsing aids used:
  - Detergent 1: DR. WEIGERT neodisher Dekonta AF
  - Rinsing aid 1: DR. WEIGERT neodisher TN

Test procedure:

- The units are placed in the washing machine in the intended mounting direction (in the most sensible direction regarding water penetration, if this is not the same direction).
- The washing process (see picture below) is repeated 11 times and consists of:
  - Washing with 0.3 % alkaline detergent for 2 minutes in 70 °C hot water. (Note: the temperature is measured in the tank, not necessarily at the unit).
  - Rinsing with neutral rinsing aid for 20 seconds.
  - Drying and cooling for 30 minutes in the open air at approx. 20 °C.
- After 11 cycles, the products are left in a ventilated room for 24 hours. The above steps are repeated until a total of 250 cycles has been reached.
- Immediately after washing and after further 24 hours, the products are subjected to a high voltage test in accordance with UM-31-30-072.
- A population sample of the products is opened for water penetration control immediately after the washing test.
  Accept criteria are in accordance with UM-20-30-002.

Options: The following options can be used for the test:

- The units may be weighed prior to and after the washing test to detect water.
- The bubble test may be used to detect any leakages.
- X-ray may be used to detect any leakages.

LINAK washing profile for the “IPX6 Washable DURA” process

LINAK washing profile according to DURA™

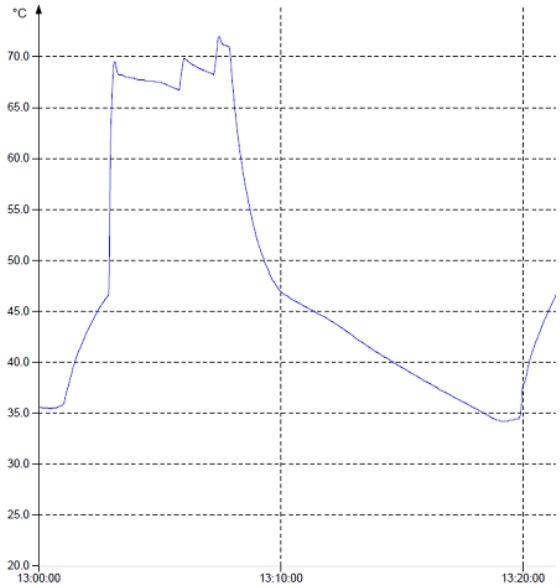

(Note: The temperature is measured at the unit)

LINAK washing machine

Cable wash

Before the washing procedure starts

In order to maintain the flexibility of the cables, it is important that the cable is placed in such a way that the cable’s own weight does not strain the coil during the washing process. This can be done by placing the cable ON the bed or another form of support for the cable. Please see the examples in the picture to the right.

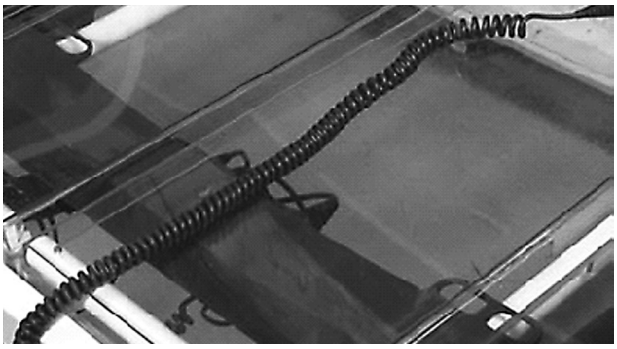

General maintenance

If not otherwise stated in the specific product section.

- LINAK products must be cleaned at regular intervals
- Frequent inspection for malfunction, mechanical damage, wear and cracks. Worn-out parts must be replaced
- Inspection/maintenance intervals are to be recommended by the medical device manufacturer
- LINAK products are closed units and require no internal maintenance
- LINAK products must be IPX6 Washable and IPX6 Washable DURA when cleaning in wash tunnels
- O-rings: When individual parts are replaced in a LINAK IPX6, IPX6 Washable or IPX6 Washable DURA system, the O-rings must be replaced at the same time on all parts. On all products where replaceable cables or fuses have been dismounted or replaced, the O-ring must be replaced, and the O-rings and the receptacle insert must be greased with an acid-free Vaseline.

Maintenance of all LINAK actuators

- Actuators/lifting columns must be regularly inspected at attachment points, wires, piston rod, enclosure, and plugs, and it must be checked that the actuators/lifting columns function correctly
- To ensure that the pregreased inner tube remain lubricated, the actuator must only be washed when the piston rod is fully retracted

Repair and disposal

Only an authorised LINAK® service centre should repair the LINAK actuator systems. Systems to be repaired under warranty must be sent to an authorised LINAK service centre.

In order to avoid the risk of malfunction, all actuator repairs must only be carried out by an authorised LINAK Service shop or repairers, as special tools and parts must be used.

If a system is opened by unauthorised personel there is a risk that it may malfunction at a later date.

LINAK systems or components may be disposed of, possibly by dividing them into different waste groups for recycling or combustion.

We recommend that our product is disassembled as much as possible at the disposal and that you try to recycle it. LINAK systems or components should be disposed of in accordance with the environmental regulations applicable in the respective country.

Troubleshooting

Symptom	Possible cause	Action
No motor sound or movement of piston rod	- The actuator is not connnected to the control box - Blown fuse in the control box - Cable damaged	- Connect the actuator to the control box - Fuse must be changed - Send actuator for repair
Excessive electricity consumption		- Send actuator for repair
Motor runs but spindle does not move	- Gear wheel or spindle damaged	- Send actuator for repair
Actuator cannot lift full load	- Clutch is worn - Motor is damaged	- Send actuator for repair
Motor sound but no movement of piston rod		- Send actuator for repair
No signal from Reed or Hall switch		- Send actuator for repair
Motor runs and quick release does not function or is noisy	- Declutching arm turns less than approx. 75 °C	- Adjust cable
Piston rod will only move inwards and not outwards	- Safety nut has operated	- Send actuator for repair
	- Not connected to mains	- Connect to mains
Power indicator does not light up	- The fuse has blown	- Replace fuse, if the system is prepared for external fuse replacement, or send the system for repair
	- Defective power cable	- On control boxes with exchangeable power cable, change the cable. - On control boxes with fixed cable, send it for repair
	- Control box defective	- Send control box for repair
	- Actuator plug not pushed into control box properly	- Push actuator plug properly into control box
Power indicator lights up, but actuator does not run	- Actuator defective	- Replace actuator - Defective control box - Replace the control box
Control box relays are clicking	- Control box defective	- Send control box for repair
Power indicator lights up, but actuator does not run	- Hand control defective	- Send hand control for repair
No relay noise is heard from control box Not valid for CB20/CB6S OBF/CB16 OBF	- Battery completely flat	- Charge battery
Control box completely dead on battery and no relay clicking	- Battery defective	- Replace battery
	- Actuator plug not properly pushed into control box	- Push actuator plug properly into control box
Actuator does not run on battery, but relay clicking can be heard	- Actuator defective	- Replace actuator
	- Control box defective	- Replace control box
	- Hand control defective - Control box defective	- Send hand control for repair - Send control box for repair
Control box okay apart from one direction on one channel		

KA19

The KA19 is a compact and fast actuator with a maximum load of 3,000 N. It is designed for a wide array of medical applications, but its strong performance and compact design makes it ideal for space critical applications such as wheelchairs, dental chairs, operation tables and ICU beds for leg extension.

Usage

Duty cycle:	10%, 2 minutes continuous use followed by 18 minutes not in use
Operation temperature:	+5 °C to +40 °C
Storage temperature:	-10 °C to +50 °C
Compatibility:	Compatible with LINAK control boxes. Please contact LINAK for more information on product compatibility.
Relative humidity:	20% to 80% – non-condensing
Atmospheric pressure:	700 to 1060 hPa
Meters above sea level:	Max. 3000 meters
Flammability rating:	UL94V-2
Approvals:	IEC60601-1 ANSI/AAMI ES60601-1 CAN/CSA-22.2 No 60601-1

Spline

Mechanical spline option:

- Required minimum push load 200 N on the actuator to allow inward movement (otherwise the spline can be activated)
- No force needed to activate the mechanical spline

Feedback specifications and end stop

E1 (power switch)	
1	NC
2	NC
3	M+ (Motor/Power)
4	NC
5	NC
6	M- (Motor/Power)

E1 (power switch) & F2 (dual Hall, digital)	
1	GND
2	VCC
3	M+ (Motor/Power)
4	Hall A
5	Hall B
6	M- (Motor/Power)

E2 (Signal switch, digital)	
1	NC
2	COMMON EOS*
3	M+ (Motor/Power)
4	EOS IN
5	EOS OUT
6	M- (Motor/Power)

E3 (encoded)	
1	GND
2	VCC
3	M+ (Motor/Power)
4	Analogue encoded (Hall-A+EOS* IN/OUT)
5	NC
6	M- (Motor/Power)

Analogue encoded	EOS
2.65V-3.25V	NONE
2.15V-2.65V	NONE
1.65V-2.15V	OUT
1.15V-1.65V	OUT
0.65V-1.15V	IN
0.05V-0.65V	IN

E3 (encoded) & F3 (dual Hall, encoded)	
1	GND
2	VCC
3	M+ (Motor/Power)
4	Analogue encoded (Hall-A+EOS* IN/OUT)
5	Hall B
6	M- (Motor/Power)

Analogue encoded	Hall-A	EOS
2.65V-3.25V	LOW	NONE
2.15V-2.65V	HIGH	NONE
1.65V-2.15V	LOW	OUT
1.15V-1.65V	HIGH	OUT
0.65V-1.15V	LOW	IN
0.05V-0.65V	HIGH	IN

* EOS = end of stroke

Feedback specifications

E3 (encoded) & F3 (dual Hall, encoded) is only used for LINAK control boxes.

E1 (power switch) & F2 (dual Hall, digital) is used for both LINAK or non-LINAK control boxes.

E1 (power switch) & F2 (dual Hall, digital) positioning is as follows:

Item	Specification	Comment
Pin configuration	Pin1 GND Pin2 VCC Pin3 M+ (motor/power) Pin4 HALL A Pin5 HALL B Pin6 M- (motor/power)	Connector front view: 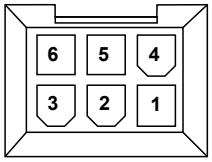
VCC	4-15V	Feedback circuit has to be powered 50ms before driving, and until actuator has stopped moving
Current	Maximum 15 mA @10kΩ and 1nF load. See diagram.	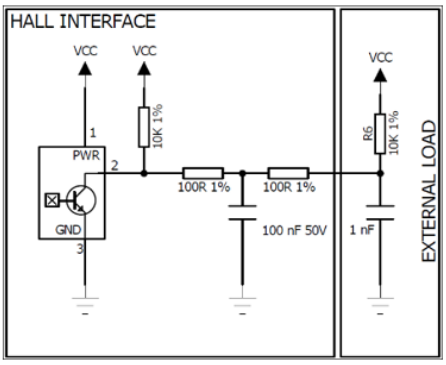
HALL A/B	TState is minimum 5 ms in all states (11,10,00,01) Duty cycle Hall A 30-70% Duty cycle Hall B 30-70% Low level <GND+0.5V @10kΩ and 1nF load High level >VCC-0.5V @10kΩ and 1nF load Driving out, the Hall B signal will go high when Hall A signal is low. Driving in, the Hall A signal will go high when Hall B signal is low.	Driving out: 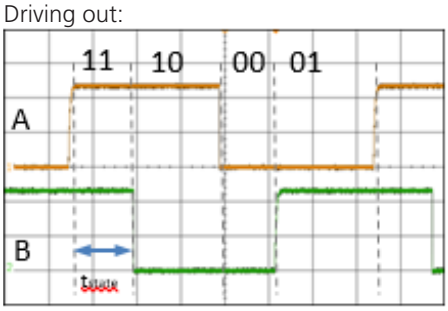 Driving in: 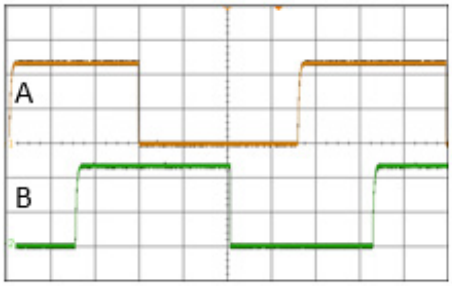
Resolution	The feedback system gives 16 state shifts per spindle turn. 3 mm pitch => 0.1875 mm per shift 4 mm pitch => 0.25 mm per shift	On 100 mm stroke you will have the following number of pulses: 3 mm pitch => 533 shifts 4 mm pitch => 400 shifts

Warnings

- The installation of spline actuators is recommended by LINAK where possible to avoid the squeezing of body parts.
- End of life issue: defective switches - endstop:
- If the electrical endstop switch fails to function, the actuator will continue to retract or extend until mechanical endstop is reached:
    - Minimum length of actuator reaching mechanical endstop: BID - 4 mm.
    - Maximum length of actuator reaching mechanical endstop: BID + SL + 9 mm.
- Even if the actuator has a mechanical endstop, the failure of electrical endstop still has the possibility to cause the application collapsing or interference. To avoid this, the manufacturer must take this into account when designing and making a risk analysis.
- If the actuator does not work as described above, the risk of injury due to squeezing can arise. Therefore, the actuator must immediately be sent for service at the nearest, authorised LINAK workshop.
- Instruction concerning the turning of the piston rod eye:
  When mounting and taking into use, it is not permitted to turn the piston rod eye several times. In cases where the eye is not positioned correctly, the eye must be screwed to its bottom position (1) and then maximum half a turn outwards again (2).

- Mounting bracket instructions:
  To avoid damage to the actuator, it is important that the actuator drives to the application endstop position and continues to operate in the groove until it activates the electric actuator endstop.

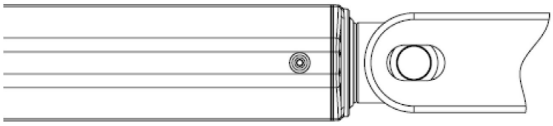

Recommendations

- Power supply without current cut-off can cause serious damage to the actuator if a mechanical stop is encountered or the actuator movement is blocked in another way.
- Connection bolts must be dimensioned so that they have the necessary strength and tolerance to obtain the minimum safety factor according to the requirements of the authorities.
- The actuator must not be subject to a side load, as this can cause bending/collapse of the actuator. The actuator must never be used as a handle.
- The actuator must not be subject to off-centre loading, as this can cause bending/ collapse of the actuator.
- The actuator must not be subject to impact, or any form of stress to the casing.
- The actuator must not be subject to overload, as this can reduce the lifetime of the actuator and in the worst-case cause damage to the actuator.
- The actuator must never be used in dynamic pull applications, as this can cause collapse.
- Only use the actuator within the specifications.
- Connection bolts and brackets are to be inspected in connection with service and must be replaced if there are signs of wear.
- Ensure that the cable lock is mounted correctly.
- Ensure that the duty cycle and the usage temperatures for KA19 are respected.
- Ensure that the cable cannot be squeezed, pulled, or subjected to any other stress.
- KA19 is not suitable for use in outdoor applications where it can be exposed to sun and rain.
- KA19 with mechanical endstop - a first failure safe option:
  In many applications customers have approvals in accordance with EN 60601-1. The typical applications are beds, massage couches etc. The norm EN 60601-1 states that the application must be first failure safe. The manufacturer has the responsibility of carrying out a risk analysis to check this. If a risk is identified, the application manufacturer must ensure that this risk is eliminated. A switch cannot be first failure safe.
- If there is a risk of “pull forces” in the application, the actuator must be equipped with spline functionality to avoid damage in pull.
- If the actuator is used in dynamic push and pull, noise and extended play in axial direction may occur during lifetime due to wear and tear.
- The max. pull load and guidelines for safety arrangements must be respected.
- KA19 with saefty nut is only available in push versions.

KA30

The KA30 is a durable actuator with a low noise level at a powerful lifting capacity (up to 8,000 N). It is available in an extensive range of push loads from 1,500 N to 8,000 N and is suitable for a variety of healthcare applications such as beds and couches.

Usage

Duty cycle:	10%, 2 minutes continuous use followed by 18 minutes not in use
Operation temperature:	+5 °C to +40 °C
Storage temperature:	-10 °C to +50 °C
Compatibility:	Compatible with LINAK control boxes. Please contact LINAK for questions on product compatibility.
Relative humidity:	20% to 80% – non-condensing
Atmospheric pressure:	700 to 1060 hPa
Height above sea level:	Max. 3000 meters
Flammability rating:	UL94V-2
Approvals:	IEC60601-1 ANSI/AAMI ES60601-1 CAN/CSA-22.2 No 60601-1

Quick release

Quick release - mechanical details

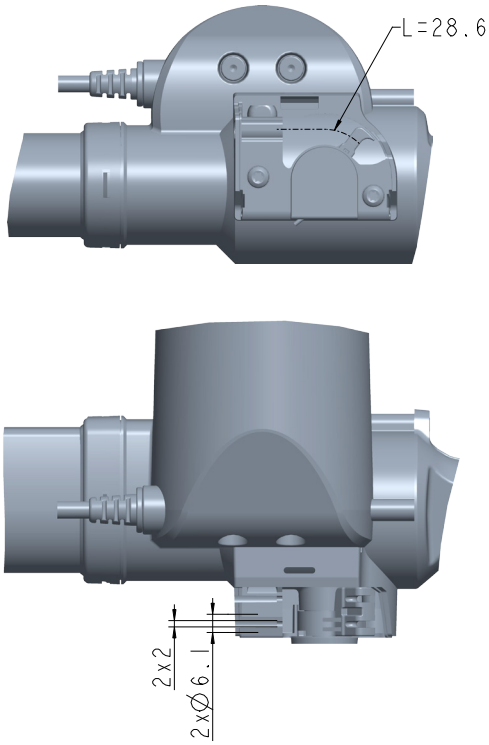

Dimensions of quick release cable

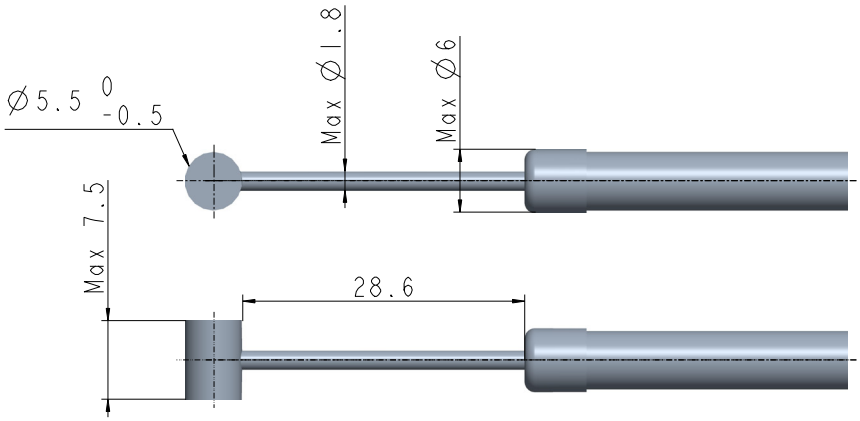

Drawing no.: 0404016

Mounting of quick release cable

Make sure that the actuator is unloaded at its fully retracted position.
Open the quick release lid using a flat-head screwdriver. Push and tip to release the lock.

Run the cable through the slot of the mounting hole for the jacket collar. Pull the cable until the jacket collar is in place.

If needed, support the cable jacket by holding it so that it stays in the mounting hole for the jacket collar.

Place the cylindrical cable end in the cable fixture. Repeat the procedure if two release cables are used.

If the cable is equipped with a barrel adjuster mechanism at the opposite cable end, then use it to adjust the cable to the recommended cable length. See drawing no. 0404016-1. Verify that the quick release mechanism is completely released when the cable is not pulled. Also verify that the cable can be pulled almost to the endstop.

Close the lid.

Now test that the quick release is functional by pulling the cable with the actuator extracted.

After operating the quick release function, it is necessary to unload the actuator before normal function is re-obtained.

Details on spline option

Mechanical spline option

- Required minimum push load 200 N on the actuator to allow inward movement (otherwise the spline can be activated)
- No force needed to activate the mechanical spline

Ratchet spline option

Only available for QR version:

- Required activation pull force during inward operation: 20-280 N to activate the ratchet spline to avoid squeezing situations
- Force required to manually activate spline (actuator not in operation): static pull force = 200-700 N. For manual pull-out (extension) of the inner tube

Instruction concerning the turning of piston rod eye

When mounting and taking into use, it is not permitted to turn the piston rod eye several times. In cases where the eye is not positioned correctly, the eye must be screwed to its bottom position (1) and then maximum half a turn outwards again (2).

Mounting bracket instructions

To avoid damage to the actuator, it is important that the actuator drives to the application endstop position and continues to operate in the groove until it activates the electric actuator endstop.

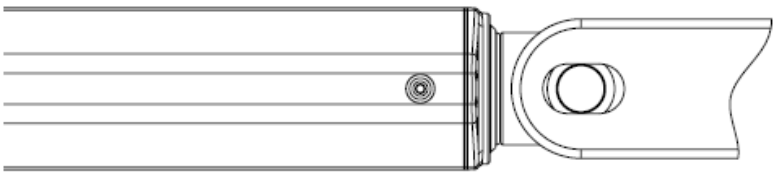

For quick release version, to avoid accumulated water inside the quick release lid (see the illustration below), it is recommended not to mount the KA30 quick release actuator with the lid in a downward position. When operating the quick release function, the quick release must be activated all the way down and not stopped halfway.

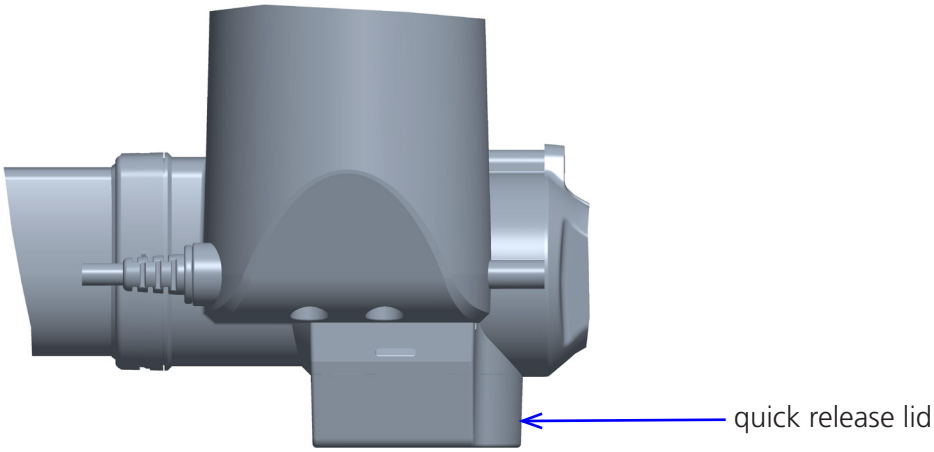

Feedback specifications

E1 (power switch)	
1	NC
2	NC
3	M+ (Motor/Power)
4	NC
5	NC
6	M- (Motor/Power)

E2 (signal switch, digital)	
1	NC
2	COMMON EOS*
3	M+ (Motor/Power)
4	EOS IN
5	EOS OUT
6	M- (Motor/Power)

*EOS = End Of Stroke (also mentioned below)

E3 (signal switch, encoded)	
1	GND
2	VCC
3	M+ (Motor/Power)
4	Analogue encoded (Hall-A+EOS* IN/OUT)
5	NC
6	M- (Motor/Power)

Analogue encoded	EOS
2.65V-3.25V	NONE
2.15V-2.65V	NONE
1.65V-2.15V	OUT
1.15V-1.65V	OUT
0.65V-1.15V	IN
0.05V-0.65V	IN

E3 (signal switch, encoded) & F2 (dual Hall)	
1	GND
2	VCC
3	M+ (Motor/Power)
4	Analogue encoded (Hall-A+EOS* IN/OUT)
5	Hall B
6	M- (Motor/Power)

Analogue encoded	Hall-A	EOS
2.65V-3.25V	LOW	NONE
2.15V-2.65V	HIGH	NONE
1.65V-2.15V	LOW	OUT
1.15V-1.65V	HIGH	OUT
0.65V-1.15V	LOW	IN
0.05V-0.65V	HIGH	IN

E1 (power switch) & F2 (dual Hall, digital)	
1	GND
2	VCC
3	M+ (Motor/Power)
4	Hall A
5	Hall B
6	M- (Motor/Power)

Feedback specifications

E3 (signal switch, encoded) & F3 (dual Hall, encoded) is only used for LINAK control boxes.

E1 (power switch) & F2 (dual Hall, digital) is used for both LINAK or non-LINAK control boxes.

E1 (power switch) & F2 (dual Hall, digital) positioning is as follows:

Item	Specification	Comment
Pin configuration	Pin1 GND Pin2 VCC Pin3 M+ Pin4 HALL A Pin5 HALL B Pin6 M-	Connector in KA30 housing: 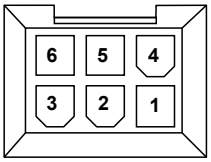
VCC	4-15V	Feedback circuit has to be powered 50ms before driving, and until actuator has stopped moving
Current	Maximum 15 mA @10kΩ and 1nF load. See diagram.	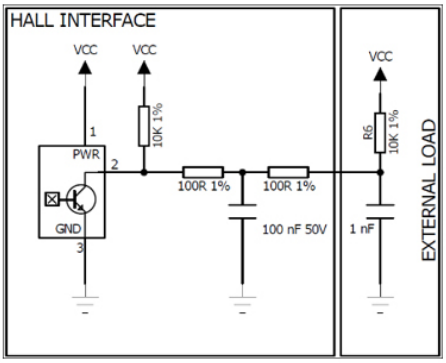
HALL A/B	TState is minimum 5 ms in all states (11,10,00,01) Duty cycle Hall A 30-70% Duty cycle Hall B 30-70% Low level <GND+0.5V @10kΩ and 1nF load High level >VCC-0.5V @10kΩ and 1nF load Driving out, the Hall B signal will go high when Hall A signal is low. Driving in, the Hall A signal will go high when Hall B signal is low.	Driving out: 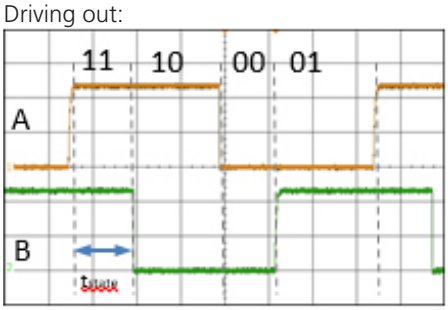 Driving in: 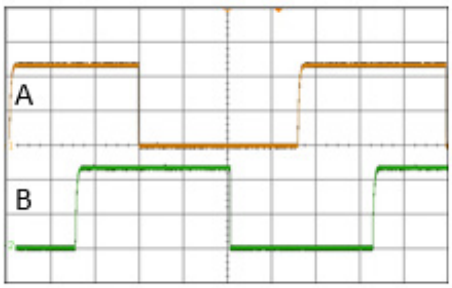
Resolution	The feedback system gives 16 state shifts per spindle turn. 3 mm pitch => 0.1875 mm per shift 4 mm pitch => 0.25 mm per shift	On 100 mm stroke you will have the following number of pulses: 3 mm pitch => 533 shifts 4 mm pitch => 400 shifts

Warnings

- Ensure that the cable cannot be squeezed, pulled, or subjected to any other stress.
- KA30 is not suitable for use in outdoor applications where it can be exposed to sun and rain.
- KA30 with mechanical endstop - a first failure safe option:
- In many applications customers have approvals in accordance with EN 60601-1. The typical applications are beds, massage couches etc. The norm EN 60601-1 states that the application must be first failure safe. The manufacturer has the responsibility of carrying out a risk analysis to check this. If a risk is identified, the application manufacturer must ensure that this risk is eliminated. A switch cannot be first failure safe.
- If there is a risk of 'pull forces' in the application, the actuator must be equipped with spline functionality to avoid damage in pull.
- If the actuator is used in dynamic push and pull, noise and extended play in axial direction may occur during lifetime due to wear and tear.
- The max. pull load and guidelines for safety arrangements in accordance with the User Manual must be respected.
- Products equipped with a mechanical spline can be manually extended beyond their specified stroke length. This may occur, for example, if the beam of a patient lift is lifted manually without operating the actuator. If the spline is extended in this manner, the spline nut may press against the mechanical end stop of the spindle and appear to be locked. However, it is not securely seated.
  When a load is applied or the actuator is operated, the spline nut can disengage unexpectedly and return to its intended position, causing a rapid and uncontrolled drop.

Recommendations

- Power supply without current cut-off can cause serious damage to the actuator if a mechanical stop is encountered or the actuator movement is blocked in another way.
- Connection bolts must be dimensioned so that they have the necessary strength and tolerance to obtain the minimum safety factor according to the requirements of the authorities.
- The actuator must not be subject to a side load, as this can cause bending/collapse of the actuator. The actuator must never be used as a handle.
- The actuator must not be subject to off-centre loading, as this can cause bending/ collapse of the actuator.
- The actuator must not be subject to impact, or any form of stress to the casing.
- The actuator must not be subject to overload, as this can reduce the lifetime of the actuator and in the worst case cause damage to the actuator.
- Only use the actuator within the specifications.
- Connection bolts and brackets are to be inspected in connection with service and must be replaced if there are signs of wear.
- Ensure that the duty cycle and the usage temperatures for KA30 are respected.

KA30 ICA

KA30 ICA (Integrated Control Analogue) is a KA30 linear actuator featuring an integrated analogue control box.

Usage

Operation temperature:	+5 °C to +40 °C
Storage temperature:	-10 °C to +50 °C
Duty cycle:	10%, 2 minutes continuous use followed by 18 minutes not in use
Compatibility:	Compatible with SMPS10 (Class 2).
Relative humidity:	20% to 80% – non-condensing
Atmospheric pressure:	700 to 1060 hPa
Height above sea level:	Max. 3000 meters
Approvals:	IEC60601-1 ANSI/AAMI ES60601-1 CAN/CSA-22.2 No. 60601-1

Hand control configuration

Please remember that CH2 and CH3 inside the KA30 ICA are interchanged, e.g. when hand control input channel 2 is activated, the actuator connected on channel 3 will operate, and when hand control channel 3 is activated, the actuator connected on channel 2 will operate.

KA30 ICA 4-channel version

Example with standard functionality '02'

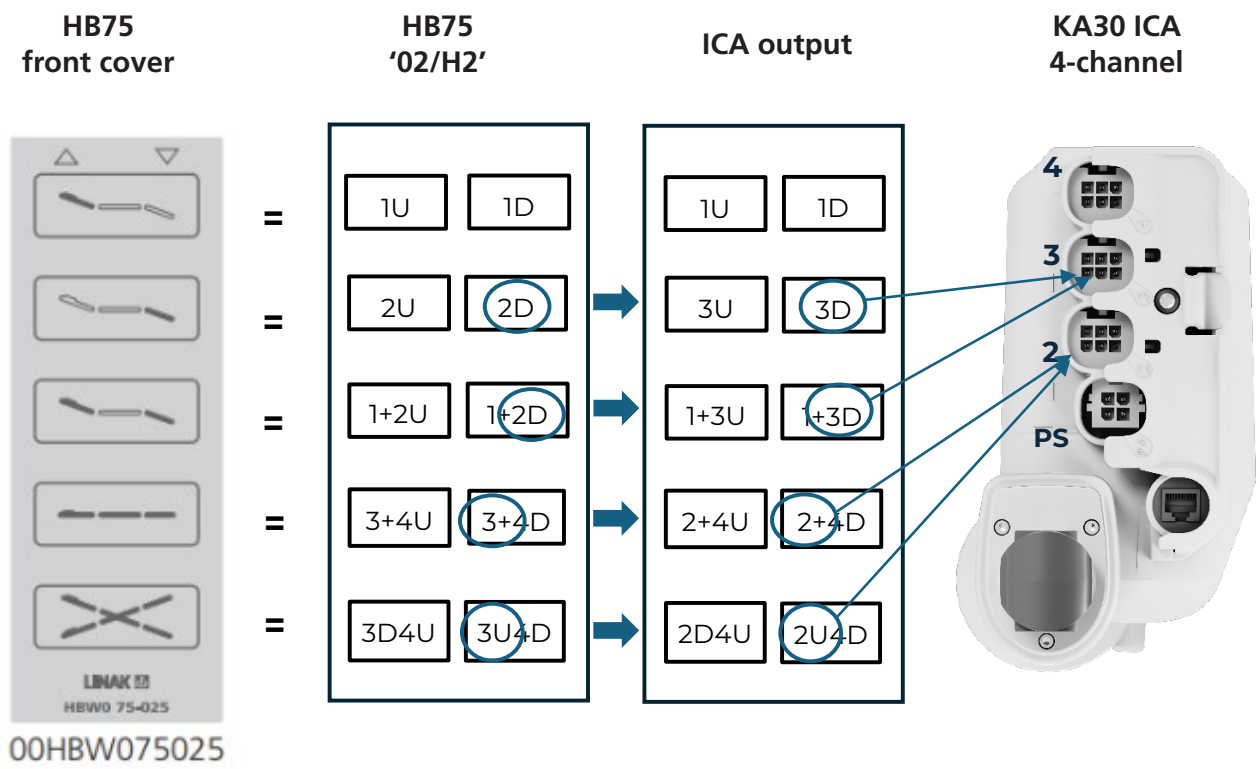

KA30 ICA 3-channel version

Example with standard functionality '01'

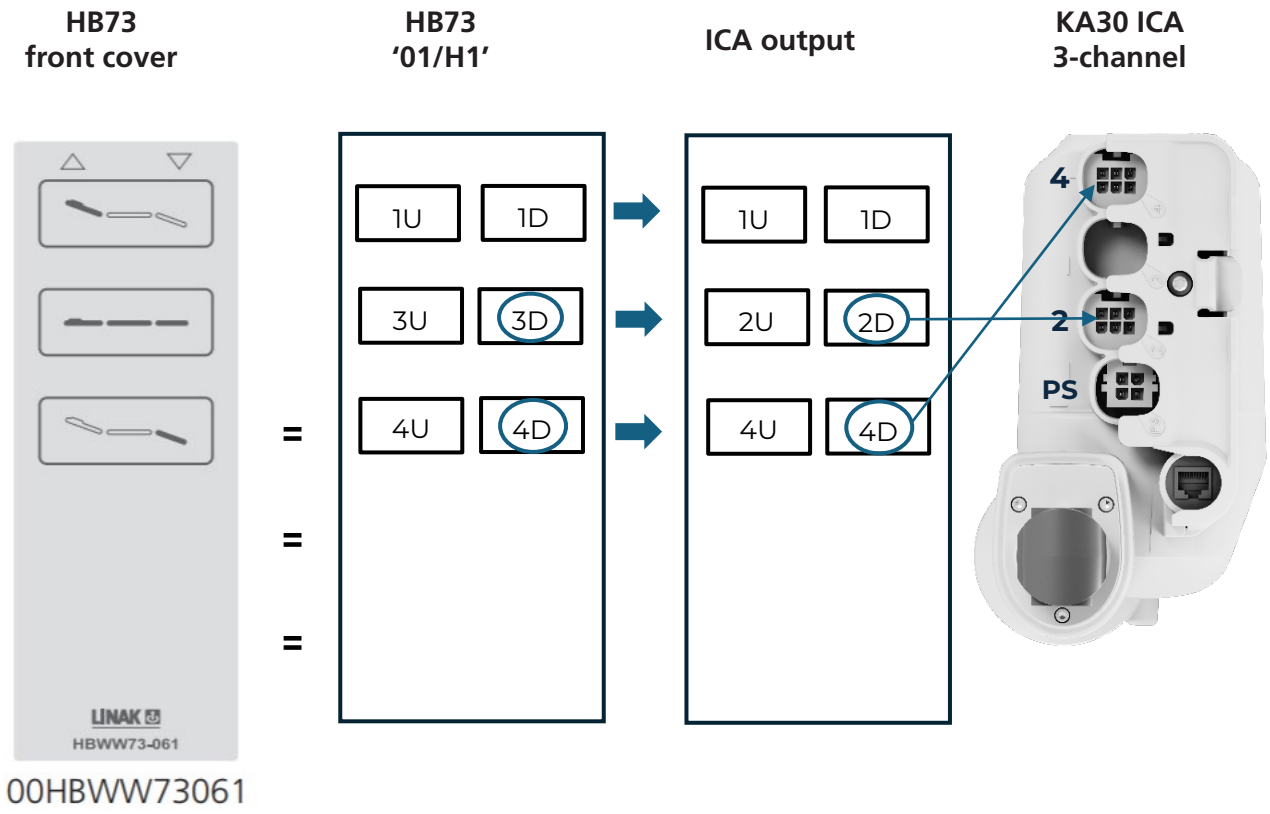

Information

On the 3-channel version, port 3 is blocked, so here hand control functionalities with channel 2 operation will not work since it is changed into CH3, which is blocked.

Battery operation

The KA30 ICA is only compatible with battery BA15. To connect BA15 to the KA30 ICA use BA15 T-cable (item number CABL00057).

Information

If a T-cable is installed in the system, the battery must be connected; otherwise, the SMPS10 cannot supply power to the system.

Battery interface

Battery T-cable connection:

J1 = ICA (4-pin mold)

J2 = BA15 (6-pin mold)

J3 = SMPS (4-pin mold extension)

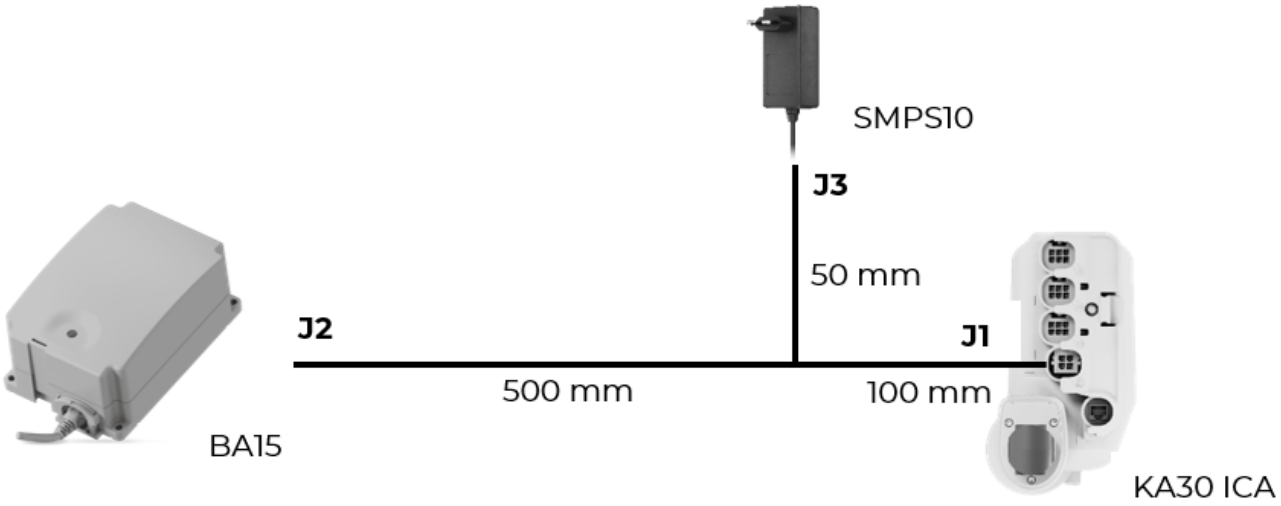

Information

- The product is not designed for dynamic load changes (from push to pull or vice versa). If the application design requires a product with a dynamic load change capability, please contact LINAK for investigation of product feasibility or guidance.
- The external SMPS determines the power characteristics of the system. There is no current cut-off circuit in the ICA.
- Cables must be ordered separately.

Recommendations

- Power supply without current cut-off can cause serious damage to the actuator if a mechanical stop is encountered or the actuator movement is blocked in another way.
- Connection bolts must be dimensioned so that they have the necessary strength and tolerance in order to obtain the minimum safety factor according to the requirements of the authorities.
- The actuator must not be subjected to off-centre loading, as this can cause bending/ collapse of the actuator.
- The actuator must not be subjected to impact, or any form of stress to the casing.
- The actuator must not be subjected to overload, as this can reduce the lifetime of the actuator and in the worst case cause damage to the actuator.
- If there is a risk of 'pull forces' in the application, the actuator must be equipped with spline functionality to avoid damage in pull.
- If the actuator is used in dynamic push and pull, noise and extended play in axial direction may occur during lifetime due to wear and tear.
- Connection bolts and brackets are to be inspected in connection with service, and must be replaced if there are signs of wear.
- Ensure that the duty cycle and the usage temperatures for KA30 ICA actuators are respected.
- The KA30 ICA is not suitable for use in outdoor applications where it can be exposed to sun and rain.
- Noise and extended play in axial direction may occur during lifetime due to wear and tear.
- Take special precautions concerning third party interfacing, the KA30 ICA is only compatible with LINAK products.
- Ensure that the cable lock is mounted correctly.
- Ensure that the cable cannot be squeezed, pulled or subjected to any other stress.
- Push plugs fully into corrects sockets and make sure the plugs are completely inserted.
- If a T-cable is installed in the system, the battery must be connected; otherwise, the SMPS10 cannot supply power to the system.

Warnings

- Only use this actuator within the specified working limits.
- The installation of spline actuators is recommended by LINAK, where possible, to avoid squeezing of body parts.
- KA30 ICA with mechanical endstop: a first failure safety option:
  In many applications, customers have approvals in accordance with EN 60601-1. The typical applications are beds, massage couches etc. The norm EN 60601-1 states that the application must be first failure safe. The manufacturer has the responsibility of carrying out a risk analysis to check this. If a risk is identified, the application manufacturer must ensure that this risk is eliminated. A switch cannot be first failure safe.
- End of life issue: defective switches - endstop:
  If the electrical endstop switch for outward operation fails, it may cause a prolonged actuator stroke and in addition the customer application may collapse. To avoid this, the manufacturer must take this into account when designing and making a risk analysis.
  Minimum length of actuator reaching mechanical endstop: BID - 7 mm.
  Maximum length of actuator reaching mechanical endstop: BID + SL + 7 mm.
- The max. pull load and guidelines for safety arrangements in accordance with the User Manual must be respected.
- Products equipped with a mechanical spline can be manually extended beyond their specified stroke length. This may occur, for example, if the application is lifted manually, causing the actuator to be extended unintentionally. If the spline is extended in this way, the spline nut may press against the mechanical end stop of the spindle and appear locked, although it is not securely seated. When a load is applied or the actuator is operated, the spline nut can disengage unexpectedly and return to its intended position, causing a rapid and uncontrolled drop.
- Instruction concerning turning of the inner tube when adjusting built-in dimension: Turning the innertube, clockwise/inwards (1) is not allowed at all.
  Do not turn the inner tube more than ½ rotation, counterclockwise/outwards (2). This must be respected otherwise it can result in collapse of the application.

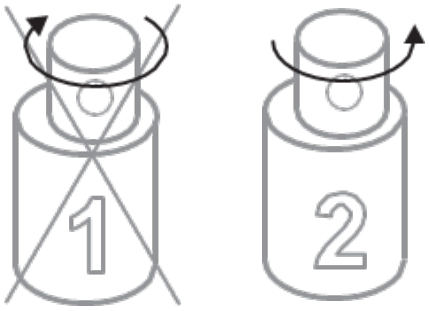

KA30 Open Spindle

KA30 Open spindle is a multi-flexible actuator which allows design-freedom for application design due to its small and compact housing in combination with the uncovered spindle.

Usage

Duty cycle:	10%, 2 minutes continuous use followed by 18 minutes not in use (5% duty cycle for fast motor type: E and F)
Operation temperature:	+5 °C to +40 °C
Storage temperature:	-10 °C to +50 °C
Compatibility:	Compatible with LINAK control boxes. Please contact LINAK for questions re. product compatibility.
Relative humidity:	20% to 80% – non-condensing
Atmospheric pressure:	700 to 1060 hPa
Height above sea level:	Max. 3000 meters
Flammability rating:	UL94V-2
Approvals:	N/A

Feedback specifications

E1 (Power switch)	
1	NC
2	NC
3	M+ (Motor/Power)
4	NC
5	NC
6	M- (Motor/Power)

E1 (Power switch) and F2 (Dual Hall, digital)	
1	GND
2	VCC
3	M+ (Motor/Power)
4	Hall A
5	Hall B
6	M- (Motor/Power)

Feedback specifications

E1 (power switch) and F2 (Dual Hall, digital) positioning are as follows:

Item	Specification	Comment
Pin configuration	Pin1 GND Pin2 VCC Pin3 M+ (Motor/Power) Pin4 Hall A Pin5 Hall B Pin6 M- (Motor/Power)	Connector front view: 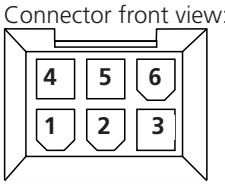
VCC	4-15V	Feedback circuit has to be powered 50ms before driving, and until actuator has stopped moving
Current	Maximum 15 mA @10kΩ and 1nF load. See diagram.	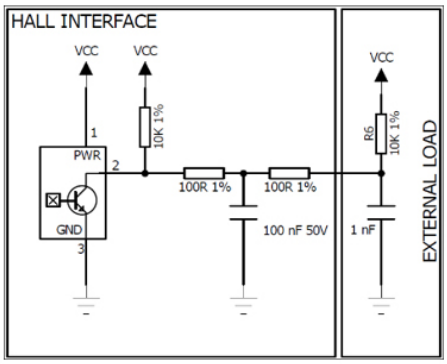
HALL A/B	TState is minimum 5 ms in all states (11,10,00,01) Duty cycle Hall A 30-70% Duty cycle Hall B 30-70% Low level <GND+0.5V @10kΩ and 1nF load High level >VCC-0.5V @10kΩ and 1nF load Driving out, the Hall B signal will go high when Hall A signal is low. Driving in, the Hall A signal will go high when Hall B signal is low.	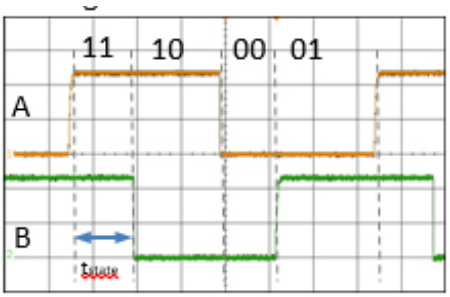 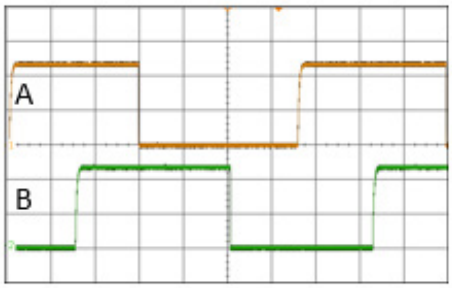
Resolution	The feedback system gives 16 state shifts per spindle turn. 3 mm pitch => 0.1875 mm per shift 4 mm pitch => 0.25 mm per shift	On 100 mm stroke you will have the following number of pulses: 3 mm pitch => 533 shifts 4 mm pitch => 400 shifts

Mounting

1. Install the back fixture (see Fig. 1) end to the application via a metal bolt.

Figure 1

2. To avoid off-centre load or even damage to the actuator, the mechanical endstop must be fixed to the application (see Fig. 2 below).

   The endstop must be fixed to the application

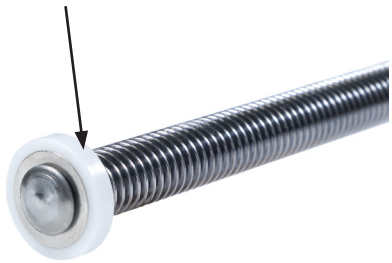

Figure 2

3. The spindle nut is to be mounted securely with the application.

Motor type	Spindle	Spindle nut
E, F, H	TR12	M22x1.5, 6 g, 21.1 mm
D	TR14	M22x1.5, 6g, 24.2 mm

4. KA30 OS is fitted with 2 external power limit switches to ensure correct and precise movement of the actuator.

Warnings

- End of life issue: defective switches – endstop:
  If the external power limit switch fails to function, the actuator will continue to retract or extend until mechanical endstop is reached:
  - Minimum length of actuator reaching mechanical endstop: BID - 4 mm.
  - Maximum length of actuator reaching mechanical endstop: BID + SL + 9 mm.

  Even if the actuator has a mechanical endstop, the failure of electrical endstop still has the possibility to cause the application to collapse or interfere. To avoid this, the manufacturer must take this into account when designing and making a risk analysis.
- If the actuator does not work as intended, there is a risk of injury. Therefore, the actuator must immediately be sent to the nearest authorised LINAK workshop for service.
- The actuator is not designed for repeated dynamic push-to-pull movement.

Recommendations

- Power supply without current cut-off can cause serious damage to the actuator if a mechanical stop is encountered or the actuator movement is blocked in another way.
- Connection bolts must be dimensioned so that they have the necessary strength and tolerance to obtain the minimum safety factor according to the requirements of the authorities.
- The actuator must not be subject to a side load, as this can cause bending/collapse of the actuator. The actuator must never be used as a handle.
- The actuator must not be subject to off-centre loading, as this can cause bending/ collapse of the actuator.
- The actuator must not be subject to impact, or any form of stress to the casing.
- The actuator must not be subject to overload, as this can reduce the lifetime of the actuator and in the worst case cause damage to the actuator.
- Only use the actuator within the specifications.
- Connection bolts are to be inspected in connection with service and must be replaced if there are signs of wear.
- Ensure that the cable lock is mounted correctly.
- Ensure that the duty cycle and the usage temperatures for KA30 OS are respected.
- Ensure that the cable cannot be squeezed, pulled, or subjected to any other stress.
- KA30 OS is not suitable for outdoor applications use where it can be exposed to sun and rain.
- KA30 OS with mechanical endstop - a first failure safe option:
- The manufacturer has the responsibility of carrying out a risk analysis to check this. If a risk is identified, the application manufacturer must ensure that this risk is eliminated. A switch cannot be first failure safe.
- If the actuator is used in dynamic push and pull, noise and extended play in axial direction may occur during lifetime due to wear and tear.
- The max. pull load and guidelines for safety arrangements in accordance with the User Manual must be respected.
- Guidance of the spindle is needed.

KA30 Patient Lift

The KA30 PL is a durable actuator with a low noise level at a powerful lifting capacity. It is available with a load capacity of up to 8,000 N, suitable for powerful lifting.

Usage

Duty cycle:	10%, 2 minutes continuous use followed by 18 minutes not in use
Operation temperature:	+5 °C to +40 °C
Storage temperature:	-10 °C to +50 °C
Compatibility:	Compatible with LINAK control boxes. Please contact LINAK for questions on product compatibility.
Relative humidity:	20% to 80% – non-condensing
Atmospheric pressure:	700 to 1,060 hPa
Height above sea level:	Max. 3,000 meters
Flammability rating:	UL94V-2
Approvals:	IEC60601-1 ANSI/AAMI ES60601-1 CAN/CSA-22.2 No 60601-1

Instruction concerning the turning of the piston rod eye

When mounting and taking into use, it is not permitted to turn the piston rod eye several times. In cases where the eye is not positioned correctly, the eye must be screwed to its bottom position (1) and then maximum half a turn outwards again (2).

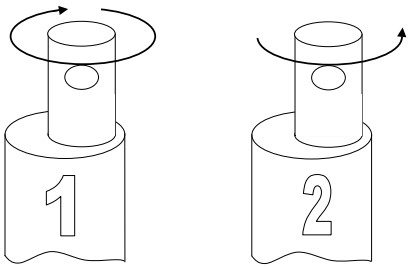

Mounting bracket instructions

To avoid damage to the actuator, it is important that the actuator drives to the application endstop position and continues to operate in the groove until it activates the electric actuator endstop.

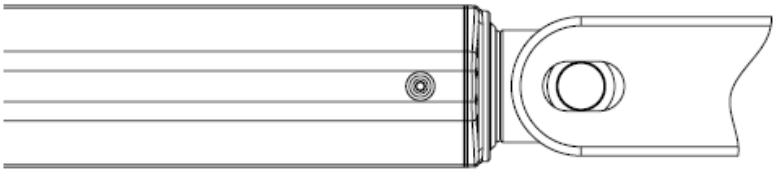

Manual lowering

The picture to the right illustrates the manual lowering procedure.

In case of a power failure, it is possible to mechanically lower a patient placed in a patient lift. When turning the manual lowering handle clockwise, the actuator can be moved fully inwards.

Note: The manual lowering unit can rotate up to 1.5 revolutions while running the actuator outwards.

After operating the manual lowering function, it is necessary to unload the actuator before normal function is re-obtained.

Mechanical spline

- Required minimum push load 200 N on the actuator to allow inward movement (otherwise the spline can be activated) (figure 1)
- Required activation pull force during inward operation to activate the spline to avoid squeezing situations (figure 2)

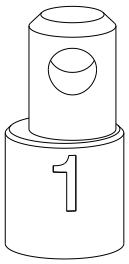

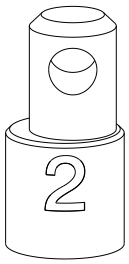

Push:

200 N
(Mechanical spline for PL versions)

Figure 1

Pull:

(Mechanical spline for PL versions)

Figure 2

Feedback and endstop specifications

E1 (power switch)	
1	NC
2	NC
3	M+ (Motor/Power)
4	NC
5	NC
6	M- (Motor/Power)

E2 (signal switch)	
1	NC
2	COMMON EOS*
3	M+ (Motor/Power)
4	EOS IN
5	EOS OUT
6	M- (Motor/Power)

*EOS = End Of Stroke (also mentioned below)

Warnings

- Ensure that the cable cannot be squeezed, pulled, or subjected to any other stress.
- KA30 PL is not suitable for use in outdoor applications where it can be exposed to sun and rain.
- KA30 PL with mechanical endstop - a first failure safe option:

  In many applications customers have approvals in accordance with EN 60601-1. The typical applications are beds, massage couches etc. The norm EN 60601-1 states that the application must be first failure safe. The manufacturer has the responsibility of carrying out a risk analysis to check this. If a risk is identified, the application manufacturer must ensure that this risk is eliminated. A switch cannot be first failure safe.
- If there is a risk of 'pull forces' in the application, the actuator must be equipped with spline functionality to avoid damage in pull.
- The actuator must not be subject to a side load, as this can cause bending/collapse of the actuator. The actuator must never be used as a handle.
- Products equipped with a mechanical spline can be manually extended beyond their specified stroke length. This may occur, for example, if the beam of a patient lift is lifted manually without operating the actuator. If the spline is extended in this manner, the spline nut may press against the mechanical end stop of the spindle and appear to be locked. However, it is not securely seated.
  When a load is applied or the actuator is operated, the spline nut can disengage unexpectedly and return to its intended position, causing a rapid and uncontrolled drop.

Recommendations

- Power supply without current cut-off can cause serious damage to the actuator if a mechanical stop is encountered or the actuator movement is blocked in another way.
- Connection bolts must be dimensioned so that they have the necessary strength and tolerance to obtain the minimum safety factor according to the requirements of the authorities.
- The actuator must not be subject to a side load, as this can cause bending/collapse of the actuator. The actuator must never be used as a handle.
- The actuator must not be subject to off-centre loading, as this can cause bending/ collapse of the actuator.
- The actuator must not be subject to impact, or any form of stress to the casing.
- The actuator must not be subject to overload, as this can reduce the lifetime of the actuator and in the worst case cause damage to the actuator.
- KA30 PL actuators for patient lifts are marked with a label to ensure that the user is aware that it is not allowed to pull the actuator or otherwise expose it to side forces when handling the patient lift.
- Only use the actuator within the specifications.
- Connection bolts and brackets are to be inspected in connection with service and must be replaced if there are signs of wear.
- Ensure that the duty cycle and the usage temperatures for KA30 PL are respected.

LA20 Inline

LA20 is a slim inline actuator created to cover a wide range of applications, where design, size and power are crucial. The combination of a high lifting capacity of 2,500 N with its robust but stylish, small form factor makes the LA20 the ideal solution for many of today's demanding applications.

Usage

Duty cycle:	Max. 10%, 2 minutes continuous use followed by 18 minutes not in use
Usage temperature:	+5 °C to +45 °C normal operating temp. -27 °C to +50 °C (according to test conditions ISO 7176-9)
Storage temperature:	-40 °C to +70 °C (according to ISO 7176-9)
Compatibility:	Compatible with LINAK control boxes. Please contact LINAK.
Relative humidity:	20% to 80% - non-condensing
Approvals:	IEC60601-1 ANSI/AAMI ES60601-1 CAN/CSA-C22.2 No. 60601-1 In compliance with ISO 7176-8
Atmospheric pressure:	700 to 1060 hPa
Meters above sea level:	Max. 3000 meters
Cycles:	The LA20 life cycle test has been performed with a stabilised power supply (10% duty cycle) on a 120mm stroke actuator at max. load for 10,000 cycles (at ambient temperature)
Flammability rating:	UL94-V0

Warnings

- Do not sideload the actuator
- Only use the actuator within specified working limits
- When mounting the LA20 in the application ensure that the bolts can withstand the wear and they are secured safely
- Motor type G and B must only be used with their respective control box types
- Motor type B: motor which must be used with COBO, CBJC, CBJ1, CBJ2, CBJH or generally in applications that are mainly battery driven or customers' own control box.
- Motor type G: motor which must be used with CO61, CO71, CO41, CA30/40.
- Instruction concerning the turning of the piston rod eye: When mounting and taking into use, it is not permitted to make excessive turns of the piston rod eye. In cases where the eye is not positioned correctly, it is permitted to first screw the eye down to its bottom position, at a maximum torque of 2Nm (1), and thereafter a maximum half turn outwards again (2).

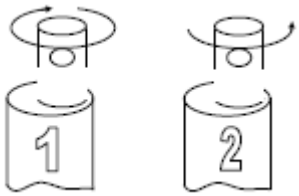

- If an actuator with stroke length below 50 mm is used, and the electrical endstop switch fails, be aware that the distance before reaching the mechanical endstop will be prolonged. The extra distance will be 50 mm minus the actual stroke length. This means that an actuator with 20 mm stroke length will travel an additional 30 mm before reaching the mechanical endstop if the switch fails.

Recommendations

- Do not place load on the actuator housing and do prevent impact or blows or any other form of stress to the housing
- Connection bolts must be dimensioned so that they have the necessary strength and tolerance in order to obtain the minimum safety factor according to the requirements of the authorities
- Ensure that the cable lock is mounted correctly
- Ensure that the cable cannot be squeezed, pulled or subjected to any other stress
- Only use the actuator within the specifications
- Connection bolts and brackets are to be inspected in connection with service and must be replaced if there are signs of wear
- The product must always have the motor short circuited to obtain self-locking according to label value/ rated value
- Ensure that the duty cycles and the usage temperatures for LA20 actuators are respected
- The LA20 is not suitable for use in outdoor applications where it can be exposed to sun and rain.
- Do not expose the actuator to pull during transport of the application

Cable mounting

A: To mount a cable

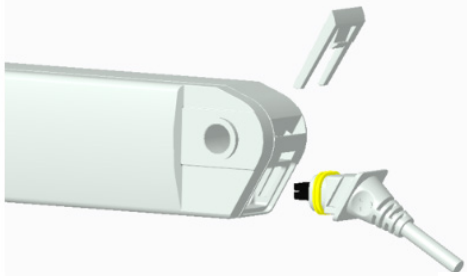

Step 1:

Place the cable in the actuator

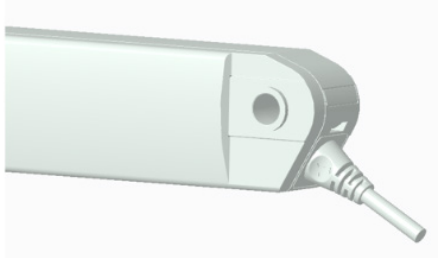

Step 2:

Press the cable lock down into place

B: To remove/change a cable

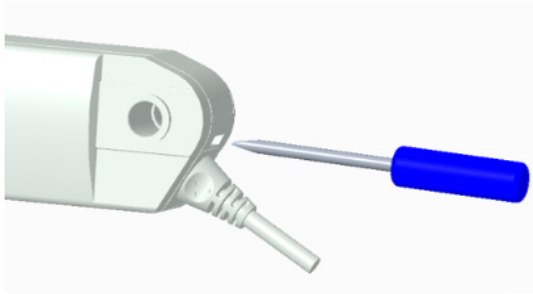

Step 1:

Place a screwdriver in the hole in the back ficture of the actuator

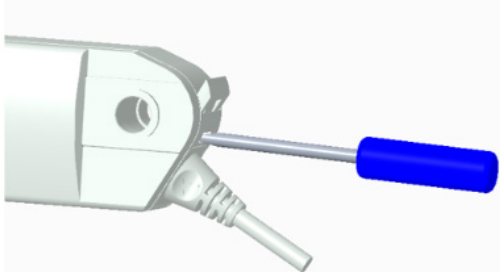

Step 2:

Push to remove the cable lock an remove/change the cable

Feedback specifications

E1 (Power switch) F1 (Motortype A + B)	
1	Not connected
2	Not connected
3	M+ (Motor/power)
4	Not connected
5	Not connected
6	M- (Motor/power)

E1 (Power switch) F2 (Dual Hall Digital) See later page (Motortype A + B)	
1	External supply: 0V
2	VCC
3	M+ (Motor/power)
4	Hall A
5	Hall B
6	M- (Motor/power)

Encoded	*EOS
2.65V-3.25V	NONE
2.15V-2.65V	NONE
1.65V-2.15V	OUT
1.15V-1.65V	OUT
0.65V-1.15V	IN
0.05V-0.65V	IN

E1 (Power switch) F7 (Hall Potentiometer) See later page (Motortype A + B)	
1	External supply: V0
2	VCC
3	M+ (Motor/power)
4	Analog feedback output
5	Not connected
6	M- (Motor/power)

Interval	Hall-A	*EOS
2.65V-3.25V	LOW	NONE
2.15V-2.65V	HIGH	NONE
1.65V-2.15V	LOW	OUT
1.15V-1.65V	HIGH	OUT
0.65V-1.15V	LOW	IN
0.05V-0.65V	HIGH	IN

E2 (Signal) F1 (Motortype G)	
1	Not connected
2	VCC
3	M+ (Motor/power)
4	EOS IN
5	EOS OUT
6	M- (Motor/power)

E3 (Encoded) F3 (Motortype G)	
1	External supply: 0V
2	VCC
3	M+ (Motor/power)
4	Analogue encoded (Hall-A+EOS* IN/OUT)
5	Not connected
6	M- (Motor/power)

E3 (Encoded) F3 (Dual Hall encoded) (Motortype G)	
1	External supply: 0V
2	VCC
3	M+ (Motor/power)
4	Hall A/Analogue encoded (Hall-A+EOS* IN/OUT)
5	Hall B with Dual-Hall or N/C when testing without Dual Hall
6	M- (Motor/power)

Input/output specifications: Dual Hall positioning

Dual Hall, Encoded (F3) is used only for LINAK A/S control boxes.

Dual Hall, Digital (F2) is used for customers' own control boxes.

Dual Hall, Digital (F2) Positioning:

Item	Specification	Comment
Pin configuration	Pin1 GND Pin2 VCC Pin3 M+ Pin4 HALL A Pin5 HALL B Pin6 M-	
VCC	4-15V	Feedback circuit has to be powered 50 ms before driving, and until actuator has stopped moving
Current	Maximum 15mA @10kΩ and 1nF load. See diagram.	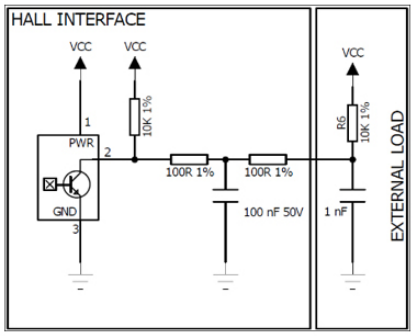
HALL A/B	TState is minimum 5ms in all states (11,10,00,01) Duty cycle Hall A 30-70% Duty cycle Hall B 30-70% Low level <GND+0.5V @10kΩ and 1nF load High level >VCC-0.5V @10kΩ and 1nF load Driving out, the Hall B signal will go high when Hall A signal is low. Driving in, the Hall A signal will go high when Hall B signal is low.w	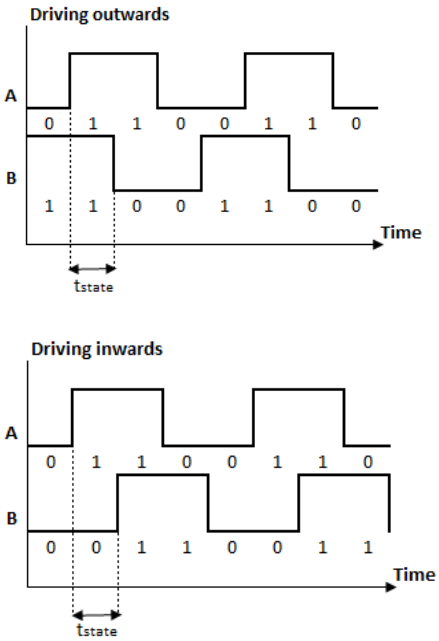
Resolution	The feedback system gives 16 state shifts per spindle turn. 3mm pitch => 0.1875mm per shift 4mm pitch => 0.25mm per shift	On 100mm stroke you will have the following number of pulses: 3mm pitch => 533 shifts 4mm pitch => 400 shifts

Input/output specifications: Dual Hall encoded

<table>
<tr><th>Item</th><th>Specification</th><th>Comment</th></tr>
<tr><td>Description</td><td>The actuator can be equipped with two hall sensors A and B and a spindle magnet. In this way you can have pulses from the actuator when it moves.</td><td>Only use for standard actuators, with LINAK A/S Control Boxes for OpenBus™.</td></tr>
<tr><td>Pin configuration</td><td><table>
<tr><td>Pin1</td><td>External supply: 0 V</td></tr>
<tr><td>Pin2</td><td>VCC</td></tr>
<tr><td>Pin3</td><td>M+ (motor/power)</td></tr>
<tr><td>Pin4</td><td>HALL A, analogue encoded (Hann-A +EOS* IN/OUT)</td></tr>
<tr><td>Pin5</td><td>HALL B with dual Hall or N/C when testing without dual Hall</td></tr>
<tr><td>Pin6</td><td>M- (motor/power)</td></tr>
</table></td><td><table>
<tr><th>Interval</th><th>Hall-A</th><th>*EOS</th></tr>
<tr><td>2.65V-3.25V</td><td>LOW</td><td>NONE</td></tr>
<tr><td>2.15V-2.65V</td><td>HIGH</td><td>NONE</td></tr>
<tr><td>1.65V-2.15V</td><td>LOW</td><td>OUT</td></tr>
<tr><td>1.15V-1.65V</td><td>HIGH</td><td>OUT</td></tr>
<tr><td>0.65V-1.15V</td><td>LOW</td><td>IN</td></tr>
<tr><td>0.05V-0.65V</td><td>HIGH</td><td>IN</td></tr>
</table></td></tr>
<tr><td>Resolution</td><td>The feedback system has an 8P magnet which gives 16 shifts in pulses per spindle turn:

2.5 mm pitch = 0.1563 mm per pulse
3 mm pitch = 0.1875 mm per pulse
4 mm pitch = 0.25 mm per pulse
5 mm pitch = 0.3125 mm per pulse
6 mm pitch = 0.375mm per pulse</td><td>Pulse/pause minimum 10 milli-seconds.
On 100 mm stroke you will have the following number of pulses:

2.5 mm pitch = 640 pulses
3.0 mm pitch = 533 pulses
4.0 mm pitch = 400 pulses
5.0 mm pitch = 320 pulses
6.0 mm pitch = 267 pulses</td></tr>
<tr><td>Connection</td><td>6 pins micro-fit</td><td>Use cables:
Standard 6 wires</td></tr>
<tr><td>Combination</td><td>Only standard</td><td></td></tr>
</table>

Input/output specifications: Hall potentiometer feedback

The Hall potentiometer feedback is an option on the LA20. This is especially suitable for wheelchairs or other applications as the LINAK control boxes are not suitable of handling the signal.

- • Hall potentiometer is close to be an absolute positioning system
- • Hall potentiometer is a long lasting and wear-resistant positioning system
- • Enables compact products to have precise positioning (potentiometer increase the product potential)

Item	Specification	Comment
Pin configuration	Pin1: External supply: V0 Pin2: VCC Pin3: M+ (motor/power) Pin4: Hall potentiometer Pin5: Not connected Pin6: M- (motor/power)	Actuator connector front view: 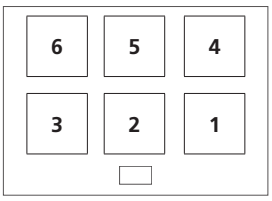
Description	The actuator can be equipped with an electronic circuit that gives a feedback signal when the actuator moves.	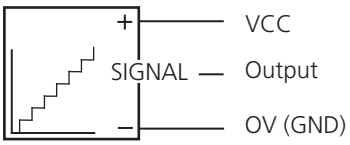
Input voltage	VCC = 5V – 12 V DC	Feedback circuit has to be powered 1 second before and after the motor runs and until the actuator has stopped. Cable dimension 0.32 mm3 (AWG22)
Output voltage	0.3V – 3.0V @ Load > 100kΩ 0.3V = EOS IN 3.0V = EOS OUT	
Current consumption	Current consumption is max 20mA @ 12V	Also when actuator is not running

Motor specification

Item	Specification	Comment
Pin connection	Pin1 Pin2 Pin3 M+/- Pin4 Pin5 Pin6 M-/+	Outwards: Pin3: + Pin6: - Inwards: Pin3: - Pin6: +
Description	Permanent magnet DC motor, available in 12V motor type A, 24V motor type B or 24V motor type G.	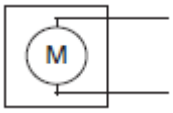 EMC noise from the motor is dealt with in LINAK A/S control boxes. If using the actuator in another application, it is up to the customer to be EMC compliant.
Input voltage	Motor type A +/- 10% Motor type B +/- 10% Motor type G +/- 10%	
Current consumption	Motor type A, 0-1 - 1.3A depending on load Motor type B, 0-1 - 1.3A depending on load Motor type G, 0.1 - 1.0A depending on load	See curves for typical values
Speed regulations	The motor can run with PWM regulation. This could be used for soft start/stop etc.	

	Mini-fit plug cable without feedback	**Mini-fit plug cable with feedback**
	EOS Switch	**Hall**
Pin 1	Switch com. (GND)	Hall (GND)
Pin 2	Vbus	Vbus
Pin 3	M+ (Motor/Power)	M+ (Motor/Power)
Pin 4	EOS wout	Hall A
Pin 5	EOD in	Hall B
Pin 6	M- (Motor/Power)	M- (Motor/Power)

Article numbers = 23xxxxxxxxxxxxB

LA23

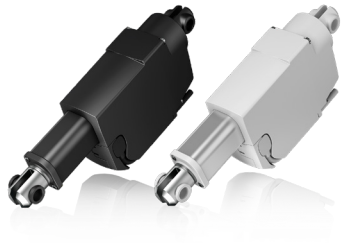

The LA23 is a small and strong push/pull actuator (up to 2,500 N). The LA23 can be used in various applications where size is important.

Some of the benefits the LA23 offers you are:

- Compact design
- High lifting force
- Exchangeable cables

Usage

Duty cycle:	10%, 2 minutes continuous use followed by 18 minutes not in use
Operation temperature:	+5 °C to +40 °C normal operating temp. -30 °C to +50 °C according to test conditions: ISO 7176-9
Storage temperature:	45 °C to +70 °C (according to ISO 7176-9)
Compatibility:	Compatible with LINAK control boxes. Please contact LINAK.
Approvals:	IEC60601-1 ANSI/AAMI ES60601-1 CAN/CSA 22.2 No 60601-01 LA23IC is not approved according to the above. LA23 in combination with CBD4, 5 & 6 has no approvals.
Flammability rating:	Enclosure UL94-V0

Warnings

- All IC (Integrated Controls) versions are not compliant for Medical use.
- Do not sideload the actuator.
- Only use the actuator within specified working limits.
- Always use steel backfixture for LA23 over 1500N and for pull loads.
- When mounting the LA23 in the application ensure that the bolts can withstand the wear and that they are secured safely.
- The B and G 24V motors must only be used with their respective control box types.
  - Motor type A: 12V motor
  - Motor type B: 24V motor which must be used with JUMBO; CBJ1/2, CBJC and CBJH or generally in applications which are mainly battery driven.
  - Motor type G: 24V motor which must be used with OpenBus™ control boxes; CB20, CB16, CB6S, CA30, CA40, CO61
- If an actuator with stroke length below 50 mm is used, and the electrical end-stop switch fails, please be aware that the distance before reaching the mechanical end-stop will be prolonged. The extra distance will be 50 mm minus actual stroke length. I.e. If an actuator with 20 mm stroke length is used and the switch fails, it will travel an additional 30 mm before reaching the mechanical end-stop.
- Instruction concerning the turning of the piston rod eye: When mounting and taking into use, it is not permitted to make excessive turns of the piston rod eye. In cases where the eye is not positioned correctly, it is permitted to first screw the eye down to its bottom position, at a maximum torque of 2Nm (1), and thereafter a maximum half turn outwards again (2).

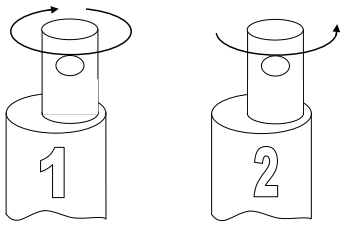

Recommendations

- Do not place load on the actuator housing and do prevent impact or blows, or any other form of stress to the housing.
- Ensure that the cable lock is mounted correctly.
- Ensure that the duty cycle and the usage temperatures for LA23 actuators is respected.
- Ensure that the cable cannot be squeezed, pulled or subjected to any other stress.
- The LA23 is not suitable for use in outdoor applications where it can be exposed to sun and rain.
- If outdoor use cannot be avoided, it is very important that the LA23 is mounted in a position where it is well shielded. It is up to the customer to provide the shielding.
- Furthermore, it will be good practice to ensure that the actuator is fully retracted in the "normal" position. The reason is that there will be a vacuum inside the actuator if it is extended which over time can lead to water entering the actuator.
- The B and G 24V motors must only be used with their respective control box types.
- Not acceptable: B motor with OpenBus™ control boxes!
  Reason: The actuator will be too strong, it will run too fast, be noisy and only have a short lifetime. The actuator will not live up to what we promise.
- Not acceptable: G motor with 24V supply!
  Reason: The actuator will be too weak, this means it will only run slowly, not be able to lift as much in the cold and under low current conditions. The actuator will not live up to what we promise.

Cable lock

The item numbers for ordering the Cable Lock are:

- Item number: 0231007 (light grey) for one cable lock (1 piece).
- Item number: 0231037 (black) for one cable lock (1 piece).

Below you see an instruction in how to mount and remove the cable lock from LA23.

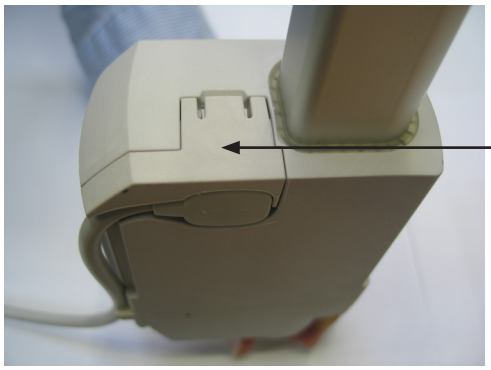

a) To mount a cable lock

Push down until the cable lock clicks into place.

b) Cable lock removal

Step 1. Insert e.g. a screwdriver at a 45° angle as illustrated.

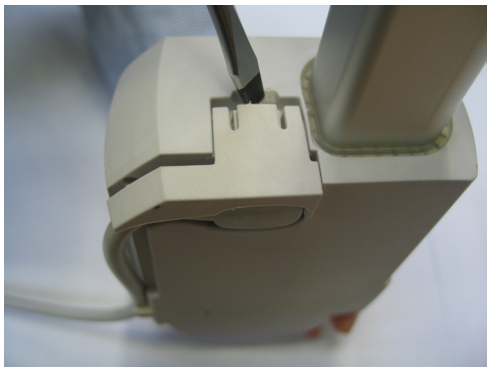

Step 2: Turn the screwdriver to release the cable lock.

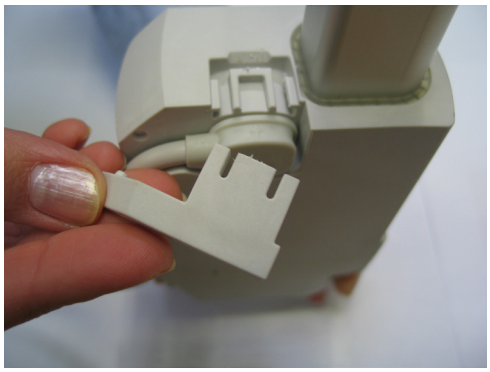

Step 3: Now the cable lock can be removed by hand.

Note: When a cable lock has been removed, it is recommended to replace it with a new.

Connection diagrams

Standard electrical end stop - no positioning

23XXXXXX00XXXXX

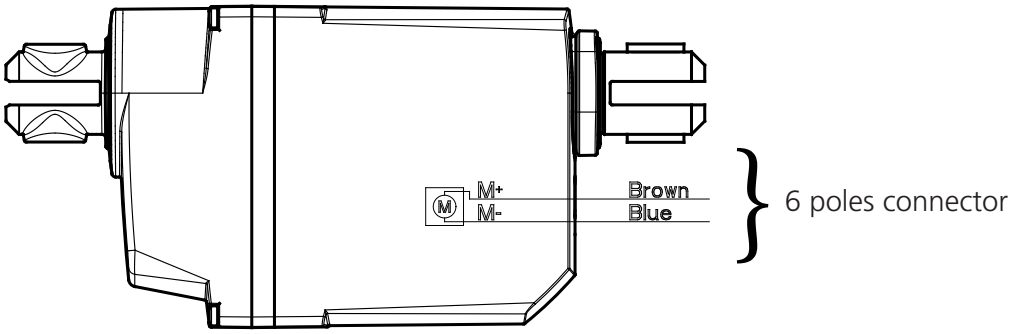

Standard electrical end stop and potential free end stop - no positioning

23XXXXXX01XXXXX

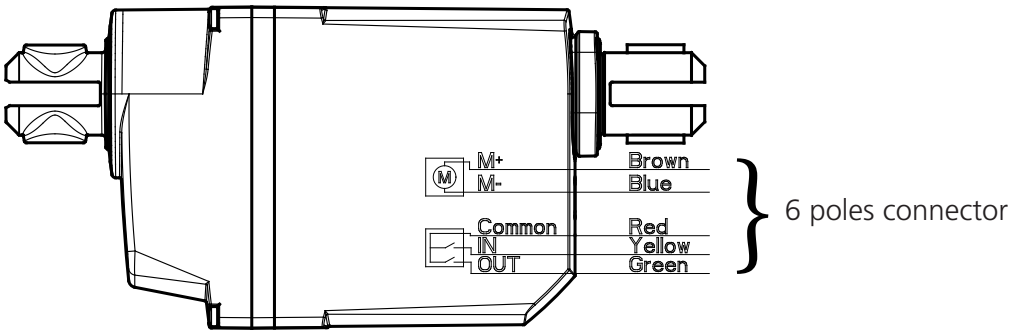

Dual Hall digital positioning

23XXXXXX02XXXXX

Dual Hall PNP positioning

23XXXXXX03XXXXX

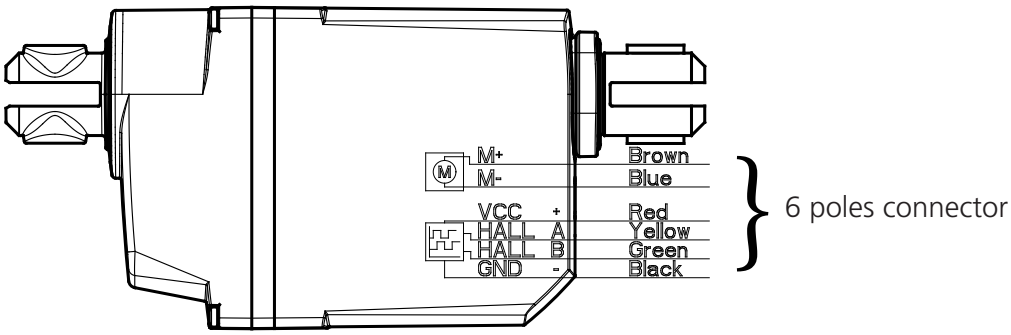

Information

- Connection colours only fit with "open end" cables.
- If reversed driving is wanted this has to be done by using different cables.
  Please see cable overview (earlier page).

Hall Potentiometer feedback and potential free end stop

23XXXXXX2XXXXXX

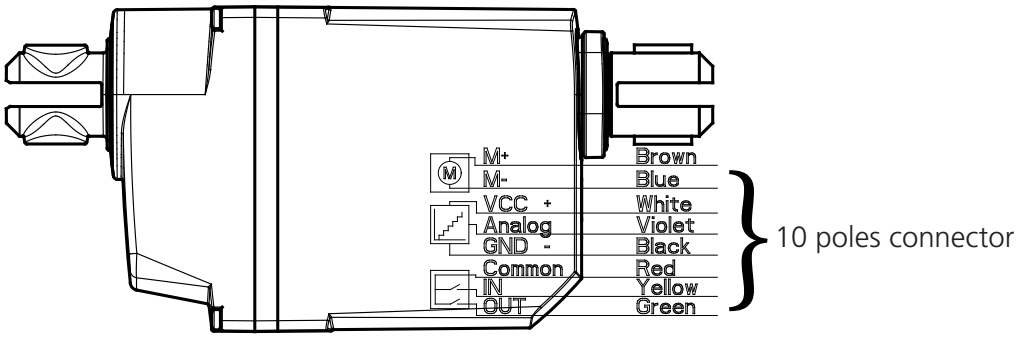

Hall Potentiometer feedback

23XXXXXX1XXXXXX

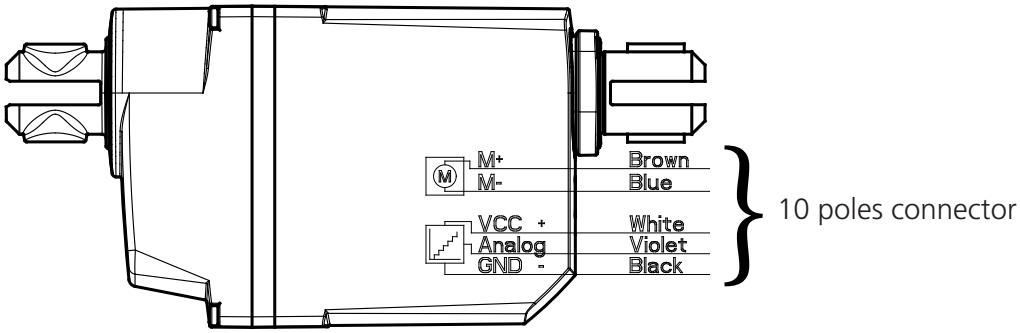

Hall PWM position feedback and potential free end stop

23XXXXXX4XXXXXX

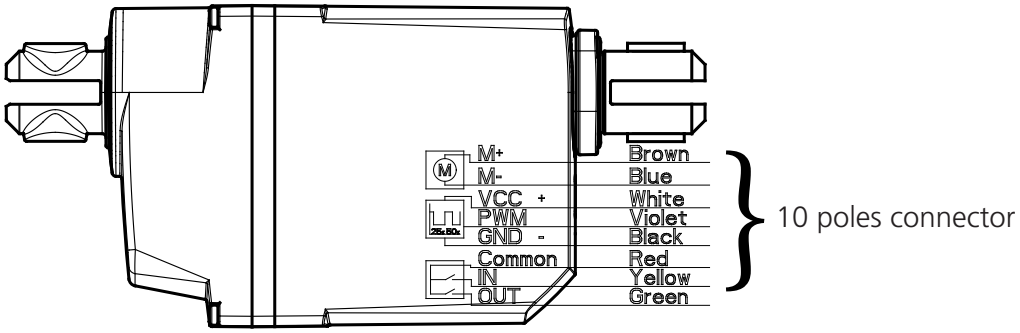

Information

- Connection colours only fit with “open end” cables.

Hall PWM position feedback

23XXXXXX3XXXXXX

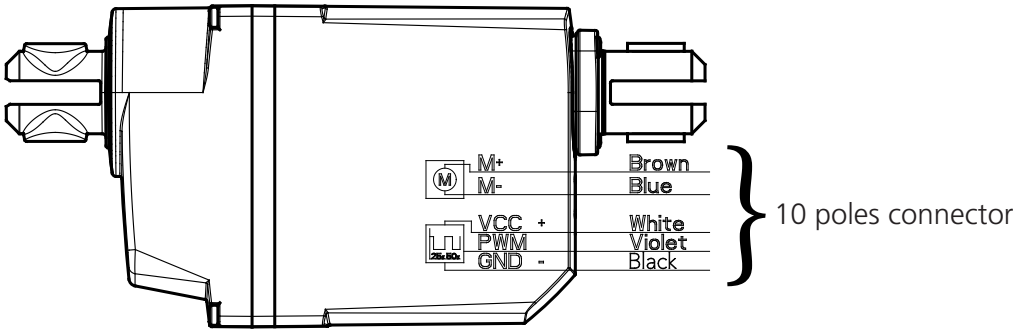

Standard Integrated Control

23XXXXXX5XXXXXX

Integrated Control with Hall Potentiometer position feedback

23XXXXXX6XXXXXX

Integrated Control with Hall PWM position feedback

23XXXXXX7XXXXXX

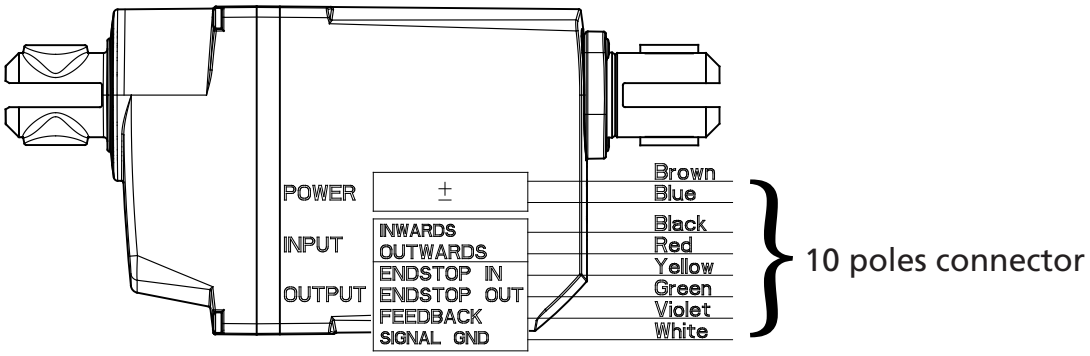

Drawing no.: 0239010-A

Information

- LA23 with integrated control is not approved according to IEC60601-1, ANSI/AAMI ES60601-1.

Note: Connection colours only fit with “open-end” cables.

Input/output specifications: Motor

Item	Specification	Comment
Description	Permanent magnet DC motor, available in 12V or 24V	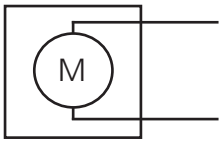 EMC noise from the motor is dealt with in LINAK A/S Control boxes. If using the actuator in another aplication it is up to the customer to be EMC compliant.
Input voltage	12VDC, +/- 20% 24VDC, +/- 10%	Cable dimension 0.50mm2 (AWG20)
Current consumption	12V, 0.2 - 6A depending on load 24V, 0.1 - 3A depending on load	See curves for typical values
Speed regulations	The motor can run with PWM regulation. This could be used for soft start/stop etc.	
Connection	To extend actuator: Connect Brown to positive, Connect Blue to negative To retract actuator: Connect Brown to negative, Connect Blue to positive	Cables: Standard 6 wires: 0237002-xxxx Absolute positioning 8 wires: 0237001-xxxx

Input/output specifications: Potential free end stop signals

Potential free end stop signals provide a signal when the actuator has reached end stop. This signal can be utilized to provide confirmation that end stop is reached.

Item	Specification	Comment
Description	The actuator can be equipped with two separate detector switches that are activated when the actuator is fully retracted (IN) or when fully extended (OUT). The detector switches are normally open.	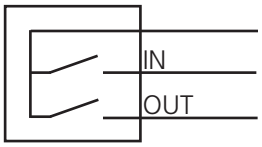
Input Voltage	3 - 20VDC	Cable dimension 0.22mm2 (AWG24)
Output Voltage	Same as input voltage	
Switching capacity	Max.: 50mA 20VDC Min.: 100µA 3VDC	
Connection	Common: Red Actuator retracted: Yellow Actuator extended: Green	Use Cables: Standard 6 wires: 0237002 - xxxx PLC/Absolute positioning 8 wires: 0237001 - xxxx
Combinations	The potential free switches can be combined with absolute feedback. But cannot be combined with "PLC/ option"	

Input/output specifications: Dual Hall, digital positioning

Item	Specification	Comment
Description	The actuator can be equipped with two hall sensors A and B and a spindle magnet. In this way you can have pulses from the actuator when it moves.	Only use for standard actuators, with LINAK A/S Control Boxes for OpenBus™.
Resolution 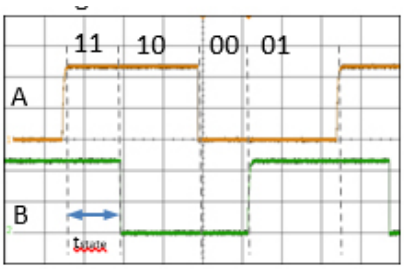 	The feedback system has an 8P magnet which gives 16 shifts in pulses per spindle turn: 3 mm pitch = 0.1875 mm per pulse 5 mm pitch = 0.3125 mm per pulse 6 mm pitch = 0.375 mm per pulse 9 mm pitch = 0.5625 mm per pulse 12 mm pitch = 0.75 mm per pulse 20 mm pitch = 1.25 mm per pulse See drawing for details. Tstate is minimum 5ms in all states (11.10.00.01)	Pulse/pause minimum 10 milli-seconds. On 100 mm stroke you will have the following number of pulses: 3 mm pitch = 533 pulses 5 mm pitch = 320 pulses 6 mm pitch = 267 pulses 9 mm pitch = 178 pulses 12 mm pitch = 133 pulses 20 mm pitch = 80 pulses
Connection	6 pins mini-fit	Use cables: Standard 6 wires: 0237003-xxxx
Combination	Only standard	

Input/output specifications: Dual Hall positioning PNP

The Dual Hall positioning PNP is an option on LA23. This is especially suitable for wheelchairs or Techline applications as the LINAK control boxes have their own option 02 for that purpose.

- • Is protected against loaddump and wrong placement of wires

Item	Specification	Comment
Description	The actuator can be equipped with two hall sensors A and B and a spindle magnet. In this way you can have pulses from the actuator when it moves.	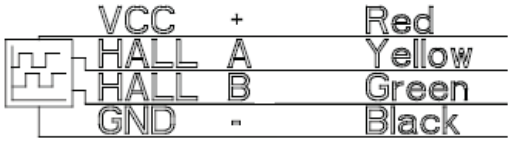
Input voltage	9-32VDC	Feedback circuit has to be powered 1 second before driving and until the actuator has stopped.
Output voltage	PNP source current: max. 12mA. HIGH: Output = VCC-1.2V (±0.5V) LOW: Output = 10KΩ pull down tRISE < 100us @24V LOAD:5m cable 1nF//10KΩ tFALL < 100us @24V LOAD:5m cable 1nF//10KΩ tstate > 10ms @24V LOAD:5m cable 1nF//10KΩ	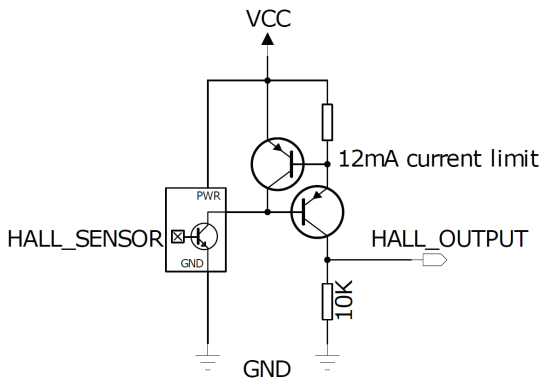
Current	Max. 20mA+source current.	Also when actuator is not running.
Protection	LOAD DUMP Wire wrong placement	
Resolution 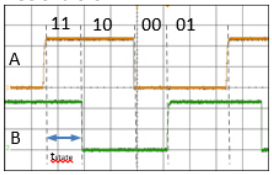	The feedback system has an 8P magnet which gives 16 shifts in pulses per spindle turn: 3 mm pitch = 0.1875 mm per pulse 6 mm pitch = 0.375 mm per pulse 9 mm pitch = 0.5625 mm per pulse 12 mm pitch = 0.75 mm per pulse 20 mm pitch = 1.25 mm per pulse See drawing for details. Tstate is minimum 5ms in all states (11.10.00.01)	On 100 mm stroke you will have the following number of pulses: 3 mm pitch = 533 pulses 6 mm pitch = 267 pulses 9 mm pitch = 178 pulses 12 mm pitch = 133 pulses 20 mm pitch = 80 pulses
Cable	Connection M+: Brown M-: Blue VCC: Red HALL A: Yellow HALL B: Green GND: BLACK Max. length 5m.	Use cables: Standard 6 wires: 0237002-xxxx

Input/output specifications: Dual Hall encoded

Item	Specification	Comment
Description	The actuator can be equipped with two hall sensors A and B and a spindle magnet. In this way you can have pulses from the actuator when it moves.	Only use for standard actuators, with LINAK A/S Control Boxes for OpenBus™.
Resolution 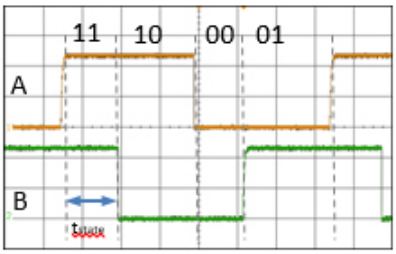 	The feedback system has an 8P magnet which gives 16 shifts in pulses per spindle turn: 3 mm pitch = 0.1875 mm per pulse 5 mm pitch = 0.3125 mm per pulse 6 mm pitch = 0.375mm per pulse 9 mm pitch = 0.5625mm per pulse 12 mm pitch = 0.75mm per pulse 20 mm pitch = 1.25 mm per pulse See drawing for details. Tstate is minimum 5ms in all states (11.10.00.01)	Pulse/pause minimum 10 milli-seconds. On 100 mm stroke you will have the following number of pulses: 3 mm pitch = 533 pulses 5 mm pitch = 320 pulses 6 mm pitch = 267 pulses 9 mm pitch = 178 pulses 12 mm pitch = 133 pulses 20 mm pitch = 80 pulses
Connection	6 pins mini-fit	Use cables: Standard 6 wires: 0237003-xxxx
Combination	Only standard	

Input/output specifications: Hall Potentiometer feedback

The Hall Potentiometer feedback is a an option on LA23. This is especially suitable for wheelchairs or Techline applications as the LINAK control boxes are not capable of handling the signal.

The main advantages are:

- Hall potentiometer is close to being an absolute positioning system
- Hall potentiometer is a long lasting and wear-resistant positioning system
- Enables compact products to have precise positioning (potentiometer increases the product potential)

Item	Specification	Comment
Description	The actuator can be equipped with an electronic circuit that gives a feedback signal when the actuator moves.	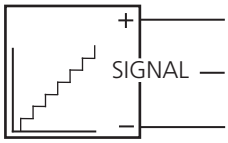
Input voltage	10 - 28VDC Ripple down to 6V acceptable Limit supply to 500mA or 500mA fuse in case of wrong polarisation.	Feedback circuit has to be powered 1 second before and after the motor runs and until the actuator has stopped. Cable dimension 0.5mm2 AWG20
Output voltage	0 - 10V +/- 0.5V @ Load > 100kΩ 0V = Fully retracted 10V = Fully extended	Can be configured between 0 - 10V Example: 1V = Fully retracted 9V = Fully extended
Current consumption	Current consumption is max. 40mA @ 12V	Also when actuator is not running.
Connection	Supply: White Ground: Black Signal: Violet	Use Cables: PLC/Absolute positioning 8 wires 0237003-xxxx
Combinations	The absolute positioning can be combined with potential free switches. But cannot be combined with relative positioning.	

Not for Medical use

Input/output specifications: IC (Integrated Control) option

Item	Specification	Comment
Description	Same	
Power supply		
Input Voltage (VIN)	12VDC, ±20%. 24VDC, ±10%. Not available with 24/33V (motor type G)	Cable dimension 0.5mm2 AWG20
Current consumption @25°C	12V, 0.4-6A depending on load 24V, 0.2-3A depending on load	Recommended fuse: 12V version = 6AT 24V version = 3AT
Standby	<500mW	
Inputs signal		
Outwards direction	>67% of VIN = on <33% of VIN = off	<3KΩ impedance = on >30KΩ impedance = off
Inwards direction	>67% of VIN = on <33% of VIN = off	<3KΩ impedance = on >30KΩ impedance = off
Output signals		
Signal GND	Used to minimize noise on the signal wires. Must be isolated from GROUND	
Actuator fully retracted (IN)	OUT voltage when active = VINSource current max. 100mA Voltage min =VIN-0.5V	
Actuator fully retracted (OUT)	OUT voltage when active = VINSource current max. 100mA Voltage min =VIN-0.5V	
FEEDBACK PWM Output	Frequency: 75Hz ± 5Hz Accuracy: ±2% Resolution: pitch divided 16 PNP source current: max. 12mA. PWM_HIGH: VCC±1V PWM_LOW: 0.5V±0.5V	tRISE < 30us @ LOAD:5m cable 10KΩ tFALL < 30us @ LOAD:5m cable 10KΩ
Hall Potentiometer feedback	0 - 10V +/- 0.5V @ Load > 100kΩ Resolution: pitch divided 16 0V = Fully retracted 10V = Fully extended Output impedance= 270Ω	Can be configured between 0 - 10V Example: 1V = Fully retracted 9V = Fully extended
FEEDBACK Single Hall	16 pulses each revolution PNP source current: max. 12mA. PWM_HIGH: VCC±1V PWM_LOW: 0.5V±0.5V	
Cable	Connection VCC : Brown GROUND : Blue INWARDS : Black OUTWARDS : Red IN : Yellow OUT : Green Feedback : Purple Signal GND : White Max. length 5m.	Use cables: Standard 8 wires: 0237001-xxxx

Input/output specifications: Hall PWM positioning feedback

The Hall PWM positioning feedback is an option on LA23. This is especially suitable for wheelchairs or Techline applications as the LINAK control boxes are not capable of handling the signal. The main advantages are:

- Hall potentiometer is close to being an absolute positioning system
- Hall potentiometer is a long lasting and wear-resistant positioning system
- PWM is more immune to noise than Hall Potentiometer feedback
- Enables compact products to have precise positioning (potentiometer increases the product potential)

Item	Specification	Comment
Description	The actuator can be equipped with an electronic circuit that gives a PWM position feedback.	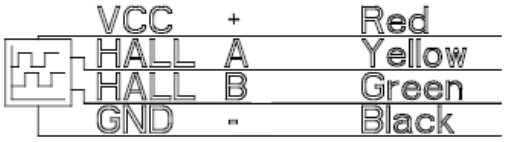
Input Voltage	10 - 28VDC Ripple down to 6V acceptable Limit supply to 500mA or 500mA fuse in case of wrong polarization	Feedback circuit has to be powered 1 second before motor runs and until the actuator has stopped. Cable dimension 0.5mm2 AWG20
PWM Output	Frequenzy: 75Hz ± 5Hz Accuracy: ±2% Resoluton: pitch divided 16 PNP source current: max. 12mA. PWM_HIGH: 10V±1V PWM_LOW: 0.5V±0.5V tRISE < 30us @ LOAD:5m cable 1nF//10KΩ tFALL < 30us @ LOAD:5m cable 1nF//10KΩ	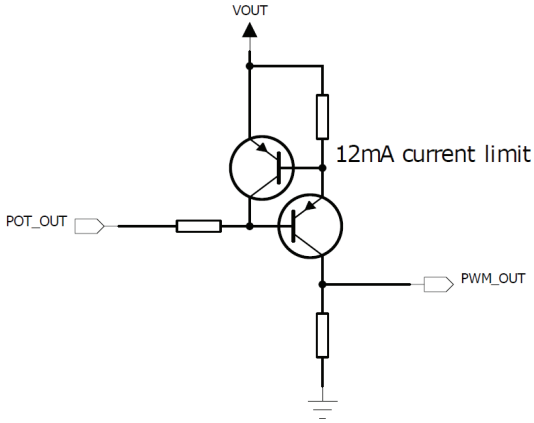
Current	Current consumption is max. 40mA @12V	Also when actuator is not running
Cable	Connection VCC: White PWM: Violet GND: BLACK Max. length 5m.	Use cables: Standard 8 wires: 0237001-xxxx
Combinations	The absolute positioning can be combined with potential free switches. But cannot be combined with relative positioning.	

LA24

LA24 is a linear actuator primarily designed for healthcare applications, such as home care and nursing home beds.

It is available in 3,500 N, 2,500 N, and 1,400 N versions, all with an IPX6 rating. LA24 is ideal for 4-motor care bed applications and movement of leg rest and backrest in a variety of healthcare bed applications.

Usage

Operation temperature:	+5 °C to +40 °C
Storage temperature:	-10 °C to +50 °C
Duty cycle:	10% or 2 minutes continuous use followed by 18 minutes not in use
Compatibility:	Compatible with LINAK control boxes
Relative humidity:	20% to 80% – non-condensing
Atmospheric pressure:	700 to 1060 hPa
Meters above sea level:	Max. 3000 meters
Approvals:	IEC60601-1 ANSI/AAMI ES60601-1 CAN/CSA-22.2 No 60601-1

Technical specifications

Actuator type	Motor type	Spindle pitch (mm)	Max. load push (N)	Self lock push (N)	Max. load pull without spline (N)	Power supply	Typical speed at 0/max. load (mm/sec.)	Typical current at full load (Amps)
LA24	Standard (B)	4	3,500	3,500	500*	24 VDC	5.9/4.8	3.5
						33 VDC	7.0/6.8	3.7
LA24	Standard (B)	5	3,500	3,500	500*	24 VDC	7.5/5.5	4.1
						33 VDC	9.6/8.2	4.3
LA24	Standard (B)	6	2,500	2,500	500*	24 VDC	8.8/7.0	3.5
						33 VDC	12.2/10.3	3.6
LA24	Standard (B)	9	1,400	1,400	500*	24 VDC	13.2/11.2	2.7
						33 VDC	18.2/16.2	2.8

* Max. static pull (with safety factor 5)

Built-in dimension (BID) and stroke length (SL) compatibility matrix

Stroke length	Installation dimension					
	BID 270		BID 320		BID 575	
	with mech. spline	without mech. spline	with mech. spline	without mech. spline	with mech. spline	without mech. spline
SL 60	OK	OK	OK	OK	OK*	OK*
SL 65	OK	OK	OK	OK	OK*	OK*
SL 85		OK	OK	OK	OK*	OK*
SL 110			OK	OK	OK*	OK*
SL 150				OK	OK*	OK*
SL 405						OK*

Not possible | OK: Max. load 3.500 N | OK*: Max. load 1.400 N

Information

Use in pull:

The product is not designed for dynamic load changes (from push to pull or vice versa). If the application design requires a product with a dynamic load change capability, please contact LINAK for investigation of product feasibility or guidance.

Recommendations

- Power supply without current cut-off can cause serious damage to the actuator if a mechanical stop is encountered or the actuator movement is blocked in another way.
- Connection bolts must be dimensioned so that they have the necessary strength and tolerance in order to obtain the minimum safety factor according to the requirements of the authorities.
- The actuator must not be subject to a side load, as this can cause bending/collapse of the actuator. The actuator must never be used as a handle.
- The actuator must not be subject to off-centre loading, as this can cause bending/ collapse of the actuator.
- The actuator must not be subject to impact, or any form of stress to the casing.
- The actuator must not be subject to overload, as this can reduce the lifetime of the actuator and in the worst case cause damage to the actuator.
- Only use the actuator within the specifications.
- Connection bolts and brackets are to be inspected in connection with service, and must be replaced if there are signs of wear.
- Ensure that the cable lock is mounted correctly.
- Ensure that the duty cycle and the usage temperatures for LA24 actuators are respected.
- Ensure that the cable cannot be squeezed, pulled or subjected to any other stress.
- The LA24 is not suitable for use in outdoor applications where it can be exposed to sun and rain.
- LA24 with mechanical endstop - a first failure safe option:
    - In many applications customers have approvals in accordance with EN 60601-1. The typical applications are beds, massage couches etc. The norm EN 60601-1 states that the application must be first failure safe. The manufacturer has the responsibility of carrying out a risk analysis in order to check this. If a risk is identified, the application manufacturer must ensure that this risk is eliminated. A switch cannot be first failure safe.
- Noise and extended play in axial direction may occur during lifetime due to wear and tear.

Warnings

- Only use this actuator within the specified working limits.
- The installation of spline actuators is recommended by LINAK, where possible, to avoid squeezing of body parts.
- End of life issue: defective switches - endstop:
    - if the electrical endstop switch for outward operation fails, it may cause a prolonged actuator stroke and in addition the customer application may collapse. To avoid this, the manufacturer must take this into account when designing and making a risk analysis.
    - Minimum length of actuator reaching mechanical endstop: BID - 7 mm.
    - Maximum length of actuator reaching mechanical endstop: BID + SL + 7 mm.
- If the actuator does not work as intended, there is a risk of injury. Therefore, the actuator must immediately be sent to the nearest authorised LINAK workshop for service.
- The actuator is not designed for repeated dynamic push-to-pull movement.
- Instruction concerning turning of the inner tube when adjusting built-in dimension: Turning the inner tube, clockwise/inwards (1) is not allowed at all.
- Do not turn the inner tube more than ½ rotation, counterclockwise/outwards (2). This must be respected otherwise it can result in collapse of the application.

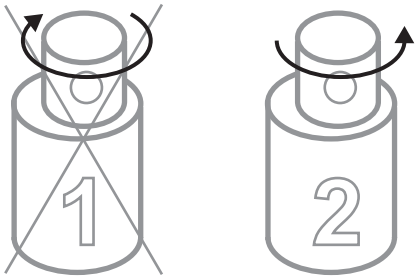

LA24 ICA

LA24 ICA (Integrated Control Analogue) combines the LA24 actuator with an analogue control box in the motor housing, simplifying installation and operation while also minimising the need for external components.

Usage

Operation temperature:	+5 °C to +40 °C
Storage temperature:	-10 °C to +50 °C
Duty cycle:	10% or 2 minutes continuous use followed by 18 minutes not in use
Compatibility:	Compatible with SMPS10 (Class 2).
Relative humidity:	20% to 80% – non-condensing
Atmospheric pressure:	700 to 1060 hPa
Meters above sea level:	Max. 3000 meters
Approvals:	IEC60601-1 ANSI/AAMI ES60601-1 CAN/CSA-22.2 No 60601-1

Hand control input/output configuration

Please remember that CH2 and CH3 inside the LA24 ICA are interchanged. This means that when hand control input channel 2 is activated, the actuator connected to channel 3 will move. Likewise, when hand control input channel 3 is activated, the actuator on channel 2 will operate.

Example with standard functionality '02'

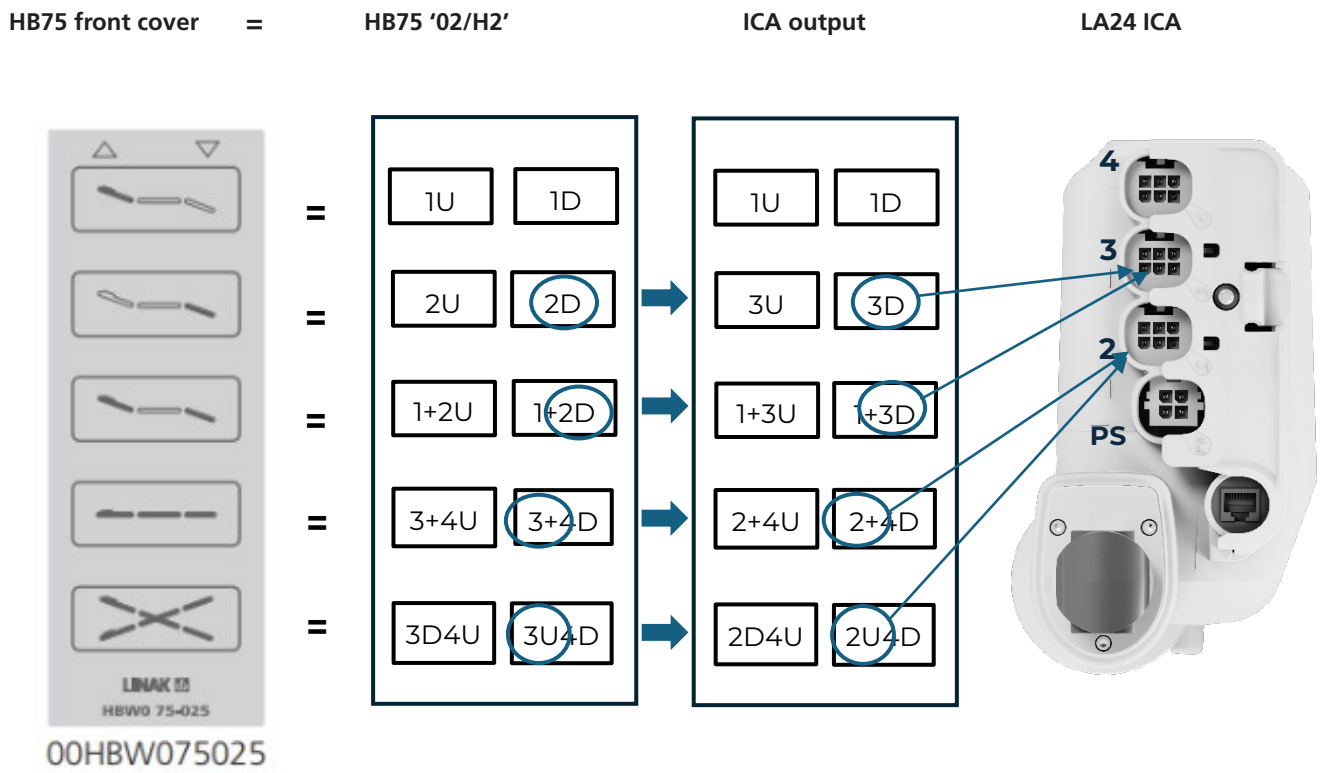

Hand control compatibility guide

The table below is meant as a visual guide and not a complete compatibility list of hand control functionality configurations.

Information

ICA is always channel 1 (mounting LA24 ICA on the back rest means that channel 1 on the hand control activates the backrest).

Application type + ICA placement	HB input HB70/HB400 examples	LA24 ICA output
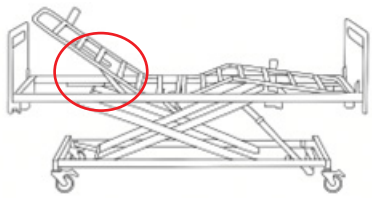	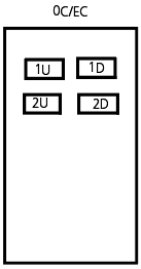	
2-motor scissor application LA24 ICA on backrest	1st row operates backrest (ICA) 2nd row operates Hi-Lo	CH1 operates backrest (ICA) CH3 operates Hi-Lo
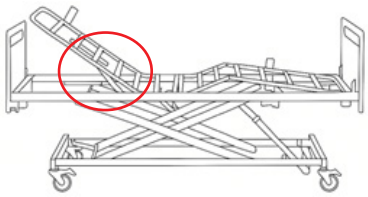	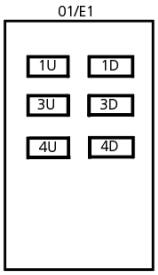	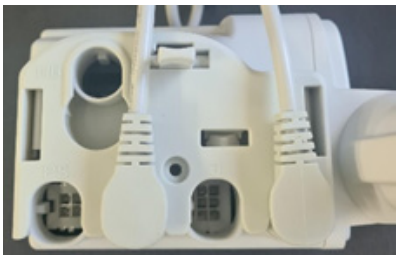
3-motor scissor application LA24 ICA on backrest	1st row operates backrest (ICA) 2nd row operates legrest 3rd row operates Hi-Lo	CH1 operates backrest (ICA) CH2 operates legrest CH4 operates Hi-Lo
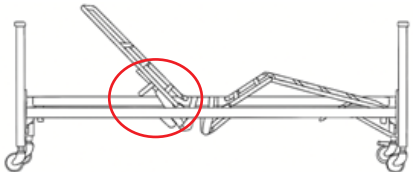	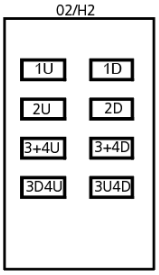	
4-motor bed-end application LA24 ICA on backrest	1st row operates backrest (ICA) 2nd row operates legrest 3rd row operates Hi-Lo 4th row operates trend	CH1 operates backrest (ICA) CH3 operates leg rest CH2+4 operates Hi-Lo CH2+4 operates trend

Battery operation

The LA24 ICA is only compatible with battery BA15. To connect BA15 to the LA24 ICA use CABL00057 BA15 T-cable.

Information

If a T-cable is installed in the system, the battery must be connected; otherwise, the SMPS10 cannot supply power to the system.

Battery interface

Battery T-cable connection:

J1 = ICA (4-pin mold)

J2 = BA15 (6-pin mold)

J3 = SMPS (4-pin mold extension)

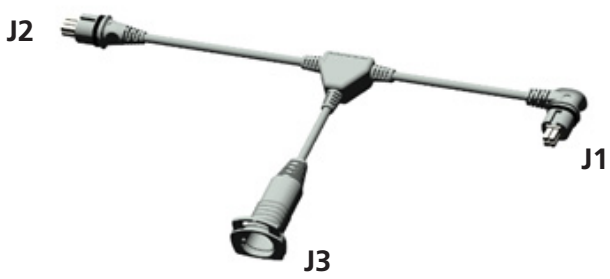

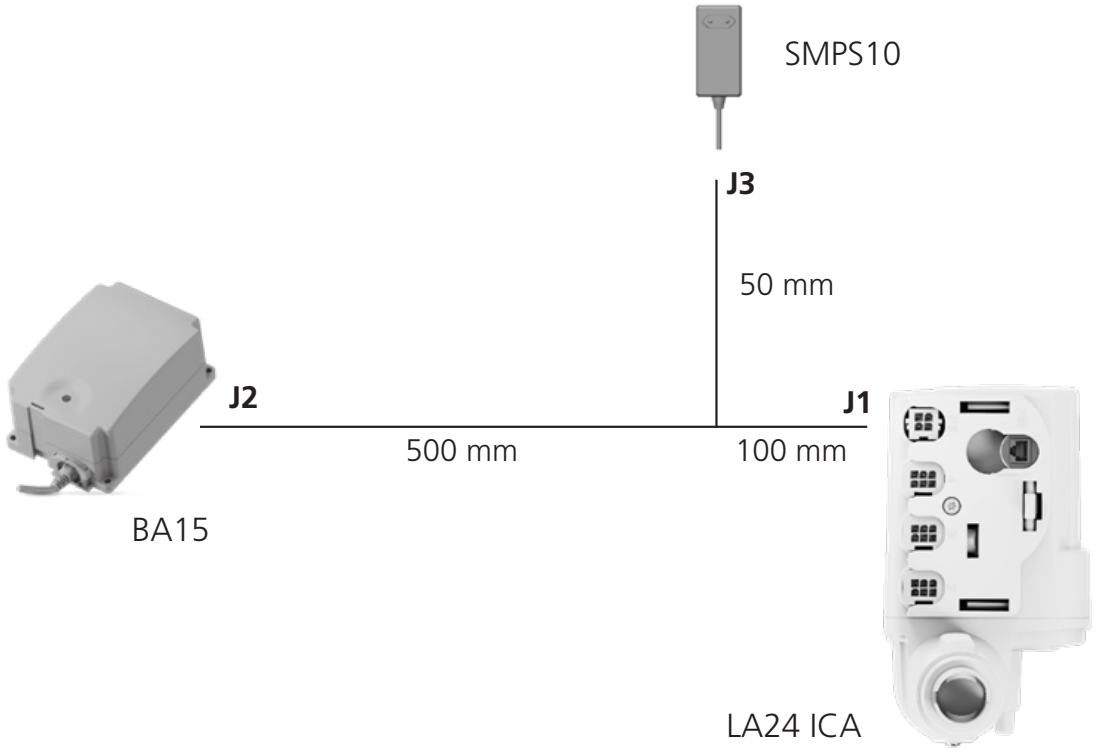

Motor cable

Always use 6-pin Mini-Fit cables.

Information

- Use in pull: The product is not designed for dynamic load changes (from push to pull or vice versa). If the application design requires a product with a dynamic load change capability, please contact LINAK for investigation of product feasibility or guidance.
- The external SMPS determines the power characteristics of the system. There is no current cut-off in the system.
- Cables must be ordered separately

Recommendations

- Power supply without current cut-off can cause serious damage to the actuator if a mechanical stop is encountered or the actuator movement is blocked in another way.
- Connection bolts must be dimensioned so that they have the necessary strength and tolerance in order to obtain the minimum safety factor according to the requirements of the authorities.
- The actuator must not be subject to off-centre loading, as this can cause bending/ collapse of the actuator.
- The actuator must not be subject to impact or any form of stress to the casing.
- The actuator must not be subject to overload, as this can reduce the lifetime of the actuator and in the worst case cause damage to the actuator.
- Only use the actuator within the specifications.
- Connection bolts and brackets are to be inspected in connection with service and must be replaced if there are signs of wear.
- Ensure that the duty cycle and the usage temperatures for LA24 actuators are respected.
- The LA24 is not suitable for use in outdoor applications where it can be exposed to sun and rain.
- LA24 with mechanical endstop - a first-failure safe option:
    - In many applications customers have approvals in accordance with EN 60601-1. The typical applications are beds, massage couches etc. The norm EN 60601-1 states that the application must be first-failure safe. The manufacturer has the responsibility of carrying out a risk analysis in order to check this. If a risk is identified, the application manufacturer must ensure that this risk is eliminated. A switch cannot be first-failure safe.
- Noise and extended play in axial direction may occur during lifetime due to wear and tear.
- Take special precautions concerning third-party interfacing, the LA24 ICA is only compatible with LINAK products.
- Ensure that the cable lock is mounted correctly.
- Ensure that the cable cannot be squeezed, pulled or subjected to any other stress.
- Push plugs fully into corrects sockets and make sure the plugs are completely inserted.
- If a T-cable is installed in the system, the battery must be connected; otherwise, the SMPS10 cannot supply power to the system.

Warnings

- Only use this actuator within the specified working limits.
- The installation of spline actuators is recommended by LINAK, where possible, to avoid squeezing of body parts.
- End of life issue: defective switches - endstop:
  - if the electrical endstop switch for outward operation fails, it may cause a prolonged actuator stroke and in addition the customer application may collapse. To avoid this, the manufacturer must take this into account when designing and making a risk analysis.
  - Minimum length of actuator reaching mechanical endstop: BID - 7 mm.
  - Maximum length of actuator reaching mechanical endstop: BID + SL + 7 mm.
- If the actuator does not work as intended, there is a risk of injury. Therefore, the actuator must immediately be sent to the nearest authorised LINAK workshop for service.
- The actuator is not designed for repeated dynamic push-to-pull movement.
- Instruction concerning turning of the inner tube when adjusting built-in dimension: Turning the inner tube, clockwise/inwards (1) is not allowed at all.
- Do not turn the inner tube more than ½ rotation, counterclockwise/outwards (2). This must be respected otherwise it can result in collapse of the application.

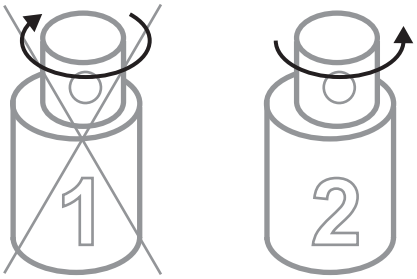

LA27

The actuator LA27 is a powerful actuator designed for a variety of medical applications. It is developed for both push and pull applications and has a very robust construction because of the ultrasonic-welded plastic housing.

Usage

Duty cycle:	2/18; 2 minutes continuous use followed by 18 minutes not in use
Ambient temperature:	5 °C to +40 °C (the actuator must also have this temperature)
Approvals:	IEC 60601-1 ANSI/AAMI ES 60601-1 CAN/CSA C-22.2 No. 60601-1
Lifetime:	With connection to a static voltage power supply of 33 V, the lifetime could be reduced to 5000 cycles (at a constant load of 6,000 N).

Information

For CB6, the current will be cut off when the total current on all channels reaches approx. 5.1 to 5.4 Amp. This means that when two LA27s, running simultaneously, are connected to a CB6, they will not be able to lift the max. load mentioned under technical specifications.

Warnings

- The installation of spline actuators is recommended by LINAK where possible to avoid the squeezing of body parts.
- Activation of a quick release can lead to a risk of squeezing body parts. Installation of a damper may reduce this risk.
- A quick release can accidentally be activated during mounting or maintenance. To avoid this, operators must be warned before service/mounting.
- End of life issue: defective switches - endstop:
  If the electrical endstop switch for outward operation fails, it may cause a prolonged actuator stroke and in addition the customer application may collapse. To avoid this, the manufacturer must take this into account when designing and making a risk analysis.
- If electrical endstop fails to function the actuator will continue to retract or extend until mechanical endstop is reached.
  The application of the customer must be able to obtain or withstand an actuator with failing electrical endstop.
  Minimum length of actuator reaching mechanical endstop: BID - 5 mm.
  Maximum length of actuator reaching mechanical endstop: BID + SL + 5 mm.
- If the actuator does not work as intended, there is a risk of injury. Therefore, the actuator must immediately be sent to the nearest authorised LINAK workshop for service.
- The actuator is not designed for repeated dynamic push-to-pull movement.

Recommendations

- The LA27 cable is not part of the actuator and must therefore be ordered separately.
- Once a year, the actuator must be inspected for wear and jarring sounds.
- In medical applications we recommend to use a safety nut.
- Do not expose actuators without all cables fitted to water/cleaning.
- The bolt inside the back fixture should have no thread.
- LA27 is not meant to have CB6S OBF mounted on the actuator. CB6S OBF must be mounted separately using a bracket.
- LA27 must have a minimum installation dimension of 320mm if control box CB6 is to be mounted on the actuator.

Instruction concerning the turning of the piston rod eye – LA27

When mounting and taking into use, it is not permitted to make excessively many turns of the piston rod eye. In cases where the eye is not positioned correctly, it is permitted to first screw the eye down to its bottom position (1), and then a maximum half turn outwards again (2).

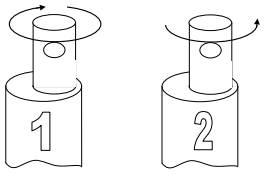

Quick release

Mounting of the release cable

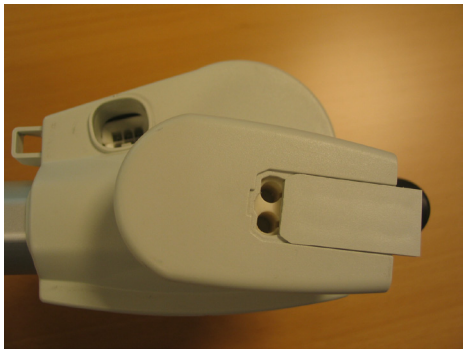

Remove the Quick Release cover, and the cable mounting holes can be seen.

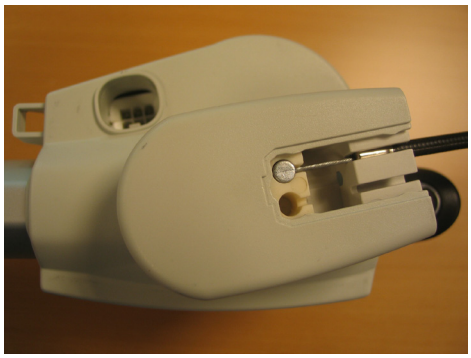

Mount the cable in one of the cable mounting holes/slots.

(If needed both holes/slots can be used)

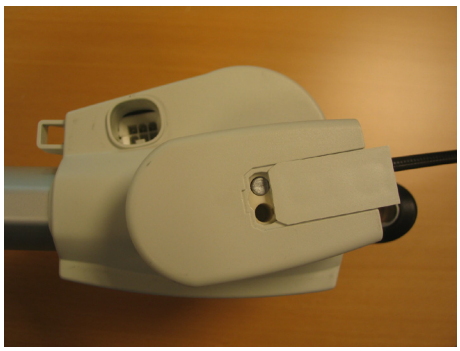

Replace the Quick Release cover all the way so that it “clicks” into place.

Application requirements for Quick Release (QR)

To avoid damage to the LA27 with QR, it is necessary for certain parameters to be specified in the application. You should therefore be aware of the following facts when supplying an LA27QR to a customer.

Constant pressure on the actuator:

- The QR mechanism can handle a maximum of 100 N pull load otherwise it will risk jamming. This means that the actuator must always have a load applied in order not to risk jamming and ensure correct operation.
- When the QR mechanism is activated, there must be a minimum load on the actuator in order to ensure that the actuator runs inwards. This load depends on the spindle pitch:
  - 5 mm must have 750 N load
  - 6 mm must have 500 N load

Mechanical stop in the application:

- When the QR mechanism is activated, the actuator will run inwards until it is stopped either by the application or by the actuator. The actuator is not constructed to absorb the impact that can occur when the QR mechanism is activated and the actuator is driven into the endstop with a full load.
- Therefore, a mechanical stop must be built into the application to stop the movement at a distance of 5 mm before the actuator moves into endstop and blocks.

Activation of QR function:

- If the QR mechanism is activated during running of the actuator, the QR mechanism might jam. To unjam the QR mechanism , it might be necessary to first run the actuator by means of the hand control.

Use the QR function:

- LA27 with QR is designed to be used as part of the bed backrest.
- If the backrest needs to be brought in horisontal position as quickly as possible, the QR handle is activated to lower the backrest. When the actuator is no longer in motion, the QR handle is released.

The QR cover must be mounted:

- To ensure that the Bowden cables are fixed correctly, the QR cover must be mounted.

Quick Release cable dimensions

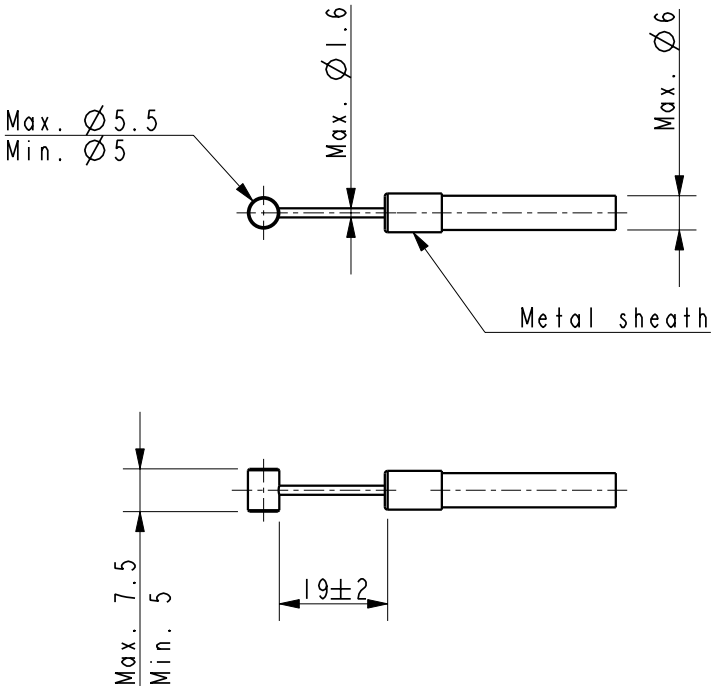

Recommendations

- The release cable has to be provided by the customer.
- The force required to operate the Quick Release is approx. 1-28 kg depending on the actuator load.
- When operating the Quick Release function, the Quick Release must be activated all the way down and not stopped halfway
- The Quick Release mechanism can only be ordered with 5 and 6 mm pitch

Mounting bracket instructions

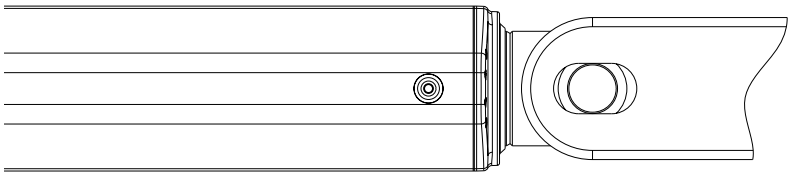

Recommendations

To avoid damage to the actuator when the actuator is in the "rest" position, there should be no load/tension on the actuator.

LA27 without cable lock

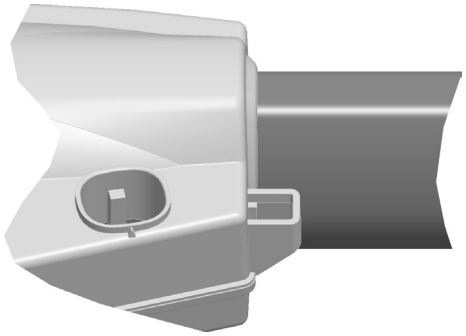

LA27 with cable lock

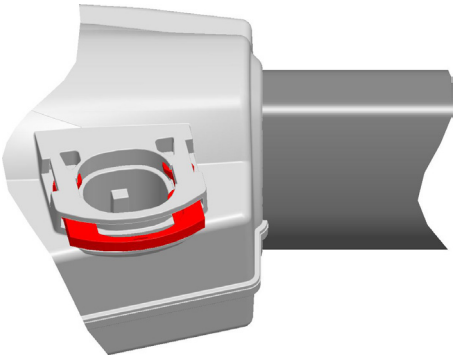

Feedback specifications

Signal (0)					
1	NC				
2	COMMON EOS				
3	M+ (motor/power)				
4	EOS IN				
5	EOS OUT				
6	M- (motor/power)				
Encoded (B)			**OpenBus**	**EOS**	
1	NC		150 - 1150 mV	IN	
2	COMMON EOS		1150 - 2150 mV	OUT	
3	M+ (motor/power)		2150 - 3150 mV	NONE	
4	EOS IN		<150mV or >3150mV	ILLEGAL	
5	EOS OUT		*Voltage is detected and interpreted by the CB		
6	M- (motor/power)				
Encoded with dual hall (A)			**Interval**	**Hall-A**	**EOS**
1	GND		2,900 - 2,917 V	LOW	NONE
2	VCC		2,400 - 2,374 V	HIGH	NONE
3	M+ (motor/power)		1,900 - 1,911 V	LOW	OUT
4	Analogue encoded (Hall-A+EOS* IN/OUT)		1,400 - 1,424 V	HIGH	OUT
5	Hall B		0,900 - 0,88 V	LOW	IN
6	M- (motor/power)		0,400 - 0,461 V	HIGH	IN
Power switch (1)					
1	NC				
2	Low when HB Down				
3	M+ (motor/power)				
4	Low when HB Up				
5	NC				
6	M- (motor/power)				

LA28

LA28 is primarily a system actuator. The actuator is very quiet and powerful, designed for the use in the CARELINE®, MEDLINE® and TECHLINE® areas of business.

Usage

Duty cycle:	Max. 10 % or 2 min. continuous use followed by 18 min. not in use
Ambient temperatures:	+5 °C to +40 °C
Compatibility:	Compatible with LINAK control boxes. Please contact LINAK.
Approvals:	IEC 60601-1 ANSI/AAMI ES60601-1 CAN/CSA-22.2 No 60601-1

Recommendations

- LINAK control boxes are designed so that they will short-circuit the motor terminals of the actuator(s), when the actuator(s) are not running. This solution gives the actuator(s) a higher self-locking ability. If the actuator(s) are not connected to a LINAK control box, the terminals of the motor must be short-circuited to enable self-locking of the actuator.
- The maximum load in pull is 2000N
- Min. stroke length for LA28 with splines is 80 mm
- The current supply to LINAK actuators must be cut off in case of overload and when the actuators reach end position
- Ambient operating temperature is 22°C

Warnings

- Do not use the actuator outside specified working limits.

Further information

Noise level

- LA28: dB(A) 45; measuring method DS/EN ISO 3743-1, actuator not loaded
- LA28S: dB(A) 54; measuring method DS/EN ISO 3743-1, actuator not loaded

Material

- The piston rod eyes are "crimped" in place and cannot be screwed loose.

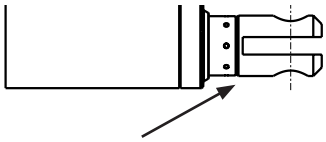

"Crimped" piston rod eye

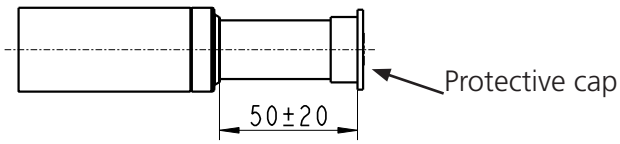

Piston rod without eye (not tested)

LA28 - PC board version C

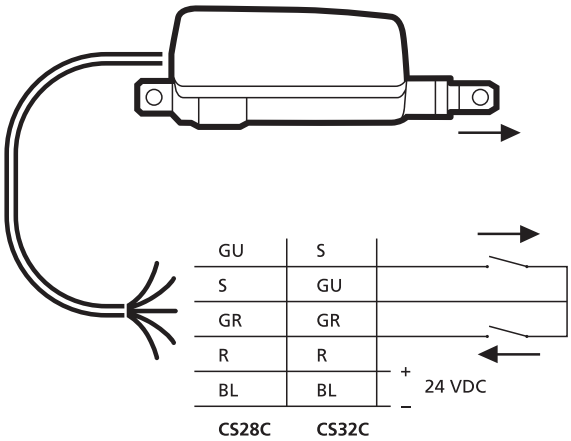

Colour codes	
S	Black
R	Red
GU	Yellow
G	Grey
BL	Blue
GR	Green

LA28 with reed switch

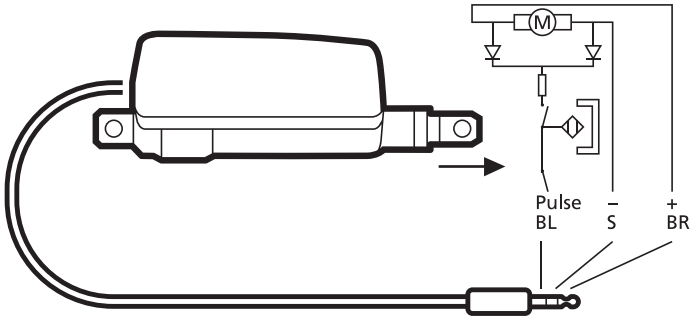

Cable connection:

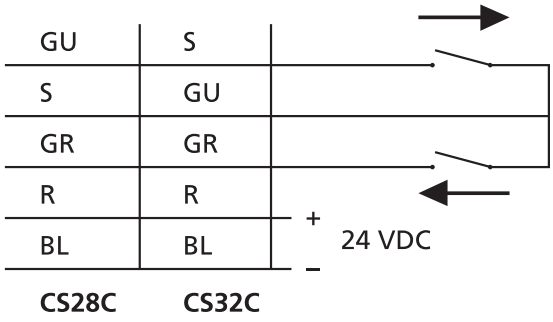

LA28 Compact

The LA28 Compact is a small and powerful actuator designed for use in system solutions for healthcare equipment or industrial applications.

Ideal applications are for example wheelchairs, treatment chairs, patient lifts or beds.

Usage

Duty cycle:	Max 10 % or max. 2 min. continuous use followed by 18 min. not in use
Ambient temperature:	+5 °C to +40 °C
Compatibility:	Compatible with LINAK control boxes. Please contact LINAK.
Approvals:	IEC 60601-1 ANSI/AAMI ES60601-1 CAN/CSA-22.2 No 60601-1

Recommendations

- LINAK control boxes are designed so that they will short-circuit the motor terminals of the actuator(s), when the actuator(s) are not running. This solution gives the actuator(s) a higher self-locking ability. If the actuator(s) are not connected to a LINAK control box, the terminals of the motor must be short-circuited to enable self-locking of the actuator LA28 Compact.
- Min. stroke length for LA28 with splines is 80 mm
- The current supply to LINAK actuators must be cut off in case of overload and when the actuators reach end position.
- Ambient operating temperature is 22°C.
- LA28 Compact cannot be used in pull applications, unless fitted with an aluminium back fixture.

Further information

Noise level

- LA28: dB(A) 45; measuring method DS/EN ISO 3743-1, actuator not loaded
- LA28S: dB(A) 54; measuring method DS/EN ISO 3743-1, actuator not loaded

Material

- The piston rod eyes are "crimped" in place and cannot be screwed loose.

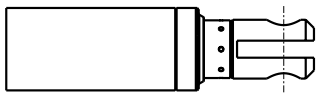

"Crimped" piston rod eye

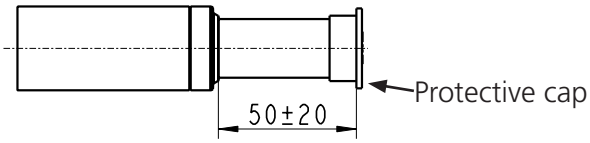

Piston rod without eye (not tested)

LA29

This particular LINAK® actuator is the ideal choice in medical equipment where power and speed are required, but where space is limited.

Usage

Duty cycle:	10% or 2 minutes continuous use followed by 18 minutes not in use
Usage temperature:	+5 °C to +40 °C
Storage temperature:	-10 °C to 50 °C
Compatibility:	Compatible with LINAK control boxes. Please contact LINAK.
Relative humidity:	20% to 80% - non-condensing
Atmospheric pressure:	700 to 1060 hPa
Height above sea level:	Max. 3000 meters
Declaration of Conformity:	A CE Declaration of Conformity has been issued

Mounting instructions

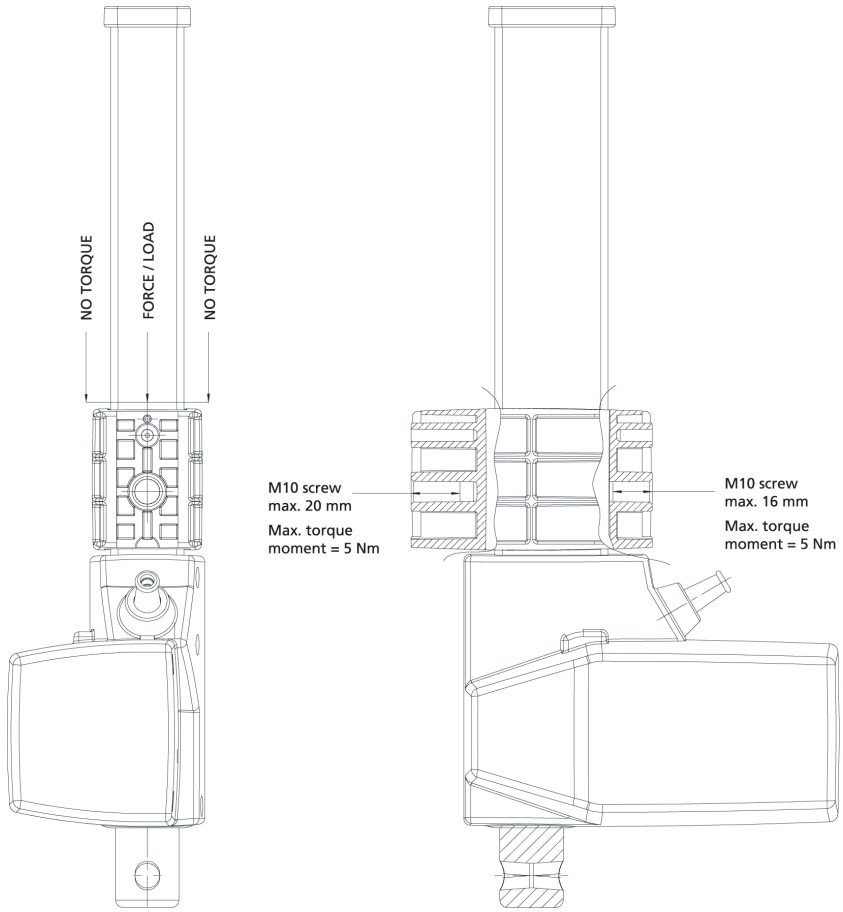

Drawing no.: LA29005A

Recommendations

- The LA29 actuator must not be used in applications where the actuator is exposed to torque moment, as this will damage the actuator.
- Do not use any other screws for the mounting brackets than those recommended by LINAK. If longer screws are used they will come into contact with the inner parts of the actuator. This will result in an irregular operation or even damage the actuator.

Warnings

- If an LA29 is used in an application with repeated dynamic push/pull, it is necessary to contact LINAK A/S in order to make a correct specification of the actuator. Repeated push/pull movements cause extra strain on the actuator and can give safety considerations, the consequence being possible actuator damage.
- Do not sideload the actuator.
- Inspect the actuator at least once a year for war and jarring sound.

Hall feedback

Dual Hall, encoded is used only for LINAK A/S control boxes.

Dual Hall, digital is used for non-LINAK A/S control boxes.

Feedback specification: dual Hall, digital positioning.

<table>
<tr><th>Item</th><th>Specification</th><th>Comment</th></tr>
<tr><td>Pin configuration</td><td><table><tr><td>Pin 1</td><td>GND</td></tr><tr><td>Pin 2</td><td>VCC</td></tr><tr><td>Pin 3</td><td>M+</td></tr><tr><td>Pin 4</td><td>HALL A</td></tr><tr><td>Pin 5</td><td>HALL B</td></tr><tr><td>Pin 6</td><td>M-</td></tr></table></td><td>Connector front view:
 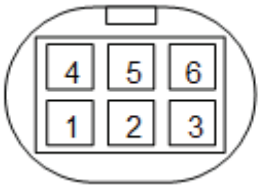
</td></tr>
<tr><td>VCC</td><td>4-15V</td><td>Feedback circuit has to be powered 50ms before driving, and until actuator has stopped.</td></tr>
<tr><td>Current</td><td>Maximum 20 mA.
See diagram.</td><td> 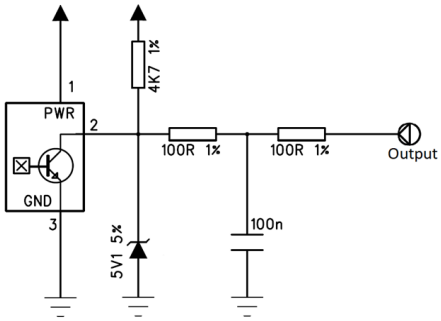
</td></tr>
<tr><td>Hall A/B</td><td>tstate is minimum 5ms in all states (11,10,00,01)

Duty cycle Hall A 30-70%
Duty cycle Hall B 30-70%

Low level <GND+0.5V @10kΩ and 1nF load
High level >VCC-0.5V @10kΩ and 1nF load

Driving out, the Hall B signal will go high when Hall A signal is low.

Driving in, the Hall A signal will go high when Hall B signal is low.w</td><td> 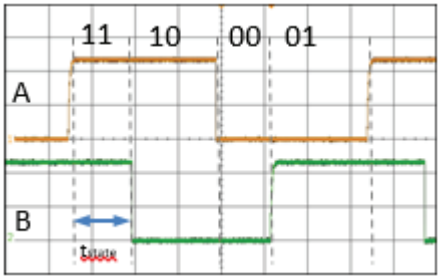

 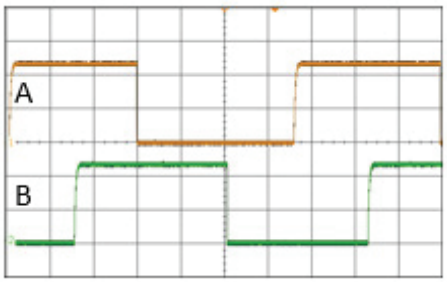
</td></tr>
<tr><td>Resolution</td><td>The feedback system gives 12 state shifts per spindle turn.
3mm pitch => 0.25mm per shift
4mm pitch => 0.3333mm per shift</td><td>On 100mm stroke you will have the following number of pulses:
3mm pitch => 400 shifts
4mm pitch => 300 shifts</td></tr>
</table>

LA30

LA30 is a powerful actuator yet small enough to fit most applications. The actuator can be supplied with options such as built-in potentiometer for servo operation or an extra powerful motor for increased speed and strength (S-motor). In addition to industrial and agricultural applications, the actuator is also ideal for positioning satellite dishes.

Usage

Duty cycle:	10%, 2 minutes continuous use followed by 18 minutes not in use
Ambient temperature:	+5 °C to +40 °C
Storage temperature:	-40 °C to +70 °C
Compatibility:	Compatible with LINAK control boxes. Please contact LINAK
Approvals:	IEC60601-1 ANSI/AAMI ES60601-1 CAN/CSA-22.2 No 60601-1

Recommendations

LINAK control boxes are designed so that they will short-circuit the motor terminals (poles) of the actuator(s), when the actuator(s) are not running. This solution gives the actuator(s) a higher self-locking ability. If the actuator(s) are not connected to a LINAK control box the terminals of the motor must be short-circuited to achieve the self-lock ability of the actuator.

Improved self-locking ability

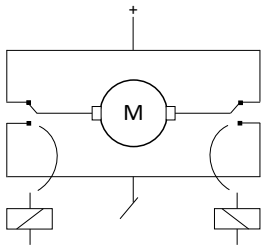

The H-bridge ensures that the motor is shorted when the relays are inactive. This is necessary to improve the self-locking of the actuator.

When using LA30 with stereo jack plug be aware of the reversed direction of travel as standard.

The current supply to LINAK actuators must be cut off in case of overload when the actuators reach end position.

Various other information

Noise levels

LA30: dB(A) 50; LA30S: dB (A) 55; LA30L: dB(A) 48.

Measuring method DS/EN ISO 3743-1, actuator not loaded.

LA30 Actuator with potentiometer

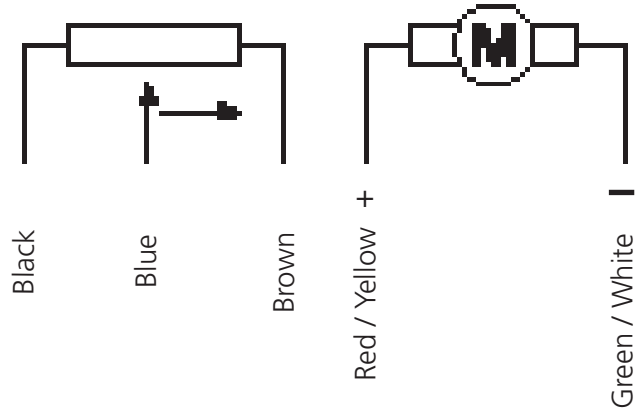

Red / Yellow	Green / White	
+	–	Out going
–	+	In going

LA30 Actuator with reed (only possible with 24 V L-motor)

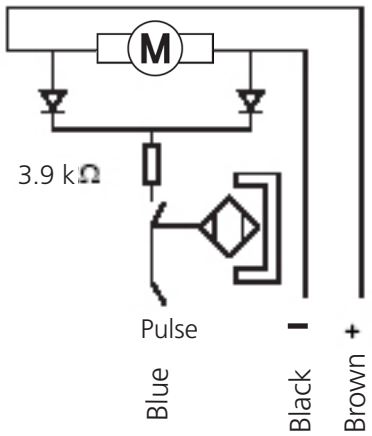

Brown	Black	
+	–	Out going
–	+	In going

Please note that the voltage level og feedback signal depends on the actuator load.

LA30 Actuator with optical encoder

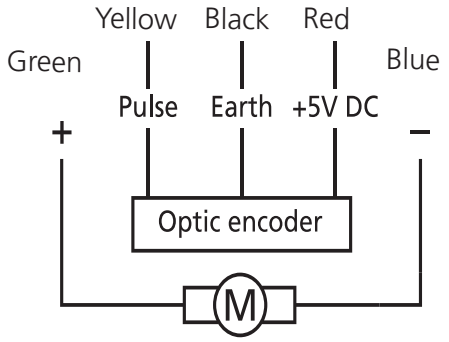

LA31

The LA31 is a compact, quiet and powerful actuator designed for a variety of applications in the MEDLINE® & CARELINE® segment, such as hospital beds, couches and nursing home beds.

The standard LA31 actuator features known parts such as piston rod eye with slot, and comes in different variations with e.g. fast motor and Hall positioning. The LA31 actuator has exchangeable cables and is ideal in combination with OpenBus™ control boxes.

The LA31 actuator has an ingress protection of IPX6 and is available in version with up to 6000 N in push or 4000 N in pull.

Usage

Duty cycle:	Max 10% or 2 minutes continuous use followed by 18 minutes not in use
Cycles:	The LA31 life cycle test has been performed with a stabilised power supply (10% duty cycle) on a 200 mm stroke actuator at max. load for 10,000 cycles (at ambient temperature)
Ambient temperature:	+5 °C to + 40 °C
Compatibility:	Compatible with LINAK control boxes. Please contact LINAK.
Approvals:	IEC 60601-1 ANSI/AAMI ES60601-1 CAN/CSA-22.2 No 60601-1

Information

- The product is not designed for dynamic load changes (from push to pull or vice versa. If the application design requires a product with a dynamic load change capability, please contact LINAK for investigation of product feasibility or guidance.

Exchangeable cables

Recommendations

- When using LA31 with reed feedback in combination with the following control boxes: CB8, CB14 and JUMBO control boxes, please use the cable type 10A31-X5XXXXX-XXXX-X to avoid control box damage

Hall feedback

Dual Hall, encoded is used only for LINAK A/S control boxes.

Dual Hall, digital is used for non-LINAK A/S control boxes.

Feedback specification: dual Hall, digital positioning.

Item	Specification	Comment
Pin configuration	Pin 1 – GND Pin 2 – VCC Pin 3 – M+ Pin 4 – HALL A Pin 5 – HALL B Pin 6 – M-	Connector front view: 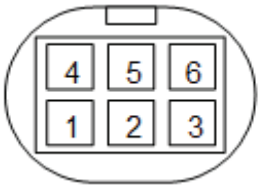
VCC	4-15V	Feedback circuit has to be powered 50ms before driving, and until actuator has stopped.
Current	Maximum 20mA. See diagram.	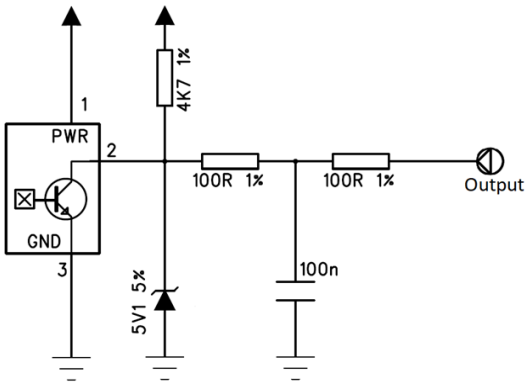
Hall A/B	tstate is minimum 5ms in all states (11,10,00,01) Duty cycle Hall A 30-70% Duty cycle Hall B 30-70% Low level <GND+0.5V @10kΩ and 1nF load High level >VCC-0.5V @10kΩ and 1nF load Driving out, the Hall B signal will go high when Hall A signal is low. Driving in, the Hall A signal will go high when Hall B signal is low.w	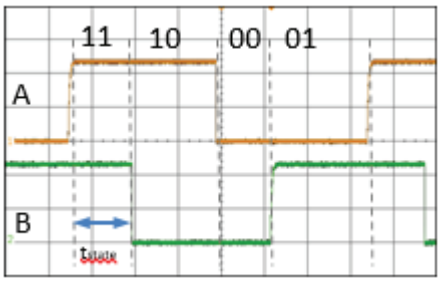 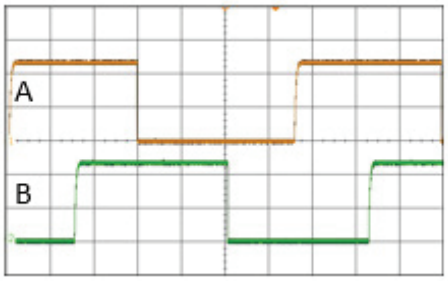
Resolution	The feedback system gives 12 state shifts per spindle turn. 3mm pitch => 0.25mm per shift 4mm pitch => 0.3333mm per shift	On 100mm stroke you will have the following number of pulses: 3mm pitch => 400 shifts 4mm pitch => 300 shifts

Hall potentiometer

Input/output specifications: absolute positioning

Item	Specification	Comment
Description	The actuator can be equipped with an electronic circuit that gives an analog feedback signal when the actuator moves.	
Input voltage	VCC = 12 - 25 VDC	Feedback circuit to be powered 1 second before motor runs, and until 1 second after the motor has stopped. Cable dimension: 2 x AWG18 and 4 x AWG26
Output voltage	POT OUT 0 - 5V 0 - 10V 0V = Fully retracted 10V = Fully extended	+/- 0.5V @ Load > 100KΩ
Current consumption	Current consumption is max. 40mA.	Also when actuator is not running

Connection diagram

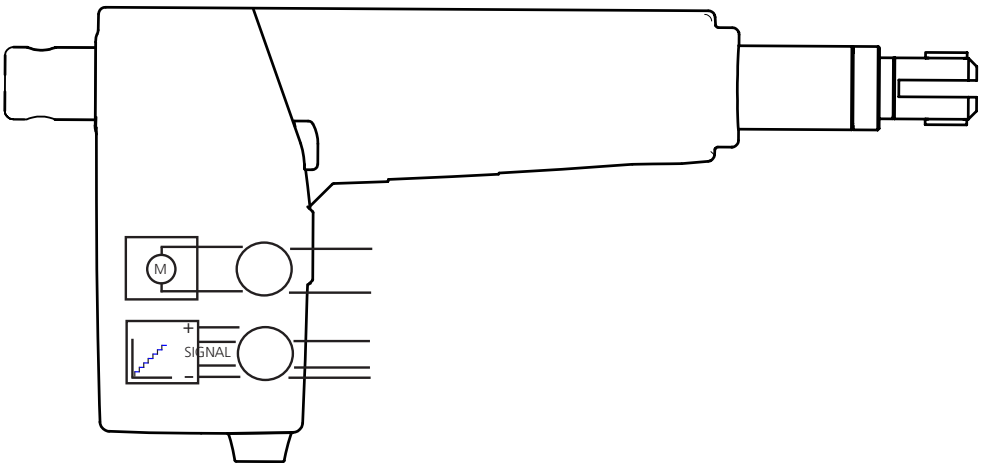

Cable connections

Mini-Fit Connector	Definitions
Pin 1	N / A
Pin 2	VCC
Pin 3	M +
Pin 4	POT-OUT
Pin 5	GND
Pin 6	M -

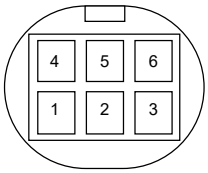

Connector front view

Mounting bracket instructions

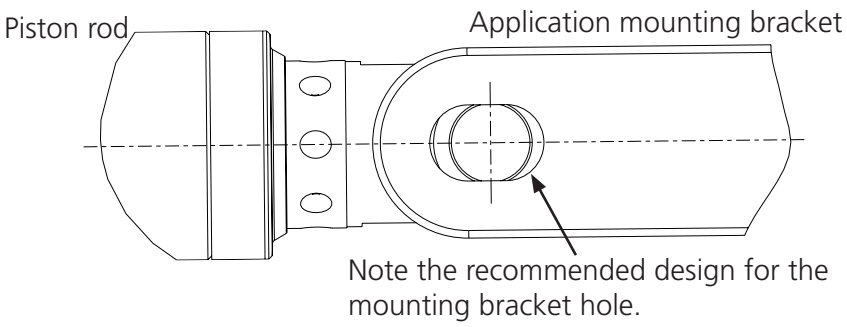

Drawing number: 031895

Recommendations

- LA31 with internal quick release types A and B is not designed for use in pull.
- The necessary release force on an actuator with 5mm pitch is 75 kg for 6 mm pitch = 50 kg.
- LA31 with quick release is always with brake (push).
- The flexible back fixtures (05 or 06) must be standard when the LA31 is equipped with quick release.
- When operating the QR function of QR types A and B, the QR must be activated all the way down. Otherwise the QR will no longer function.

Mounting of the release cable

Removal of QR cover

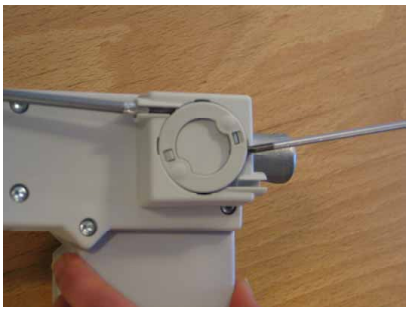

Use only light pressure near the snap-on flanges to lift the cover

QR cover removed

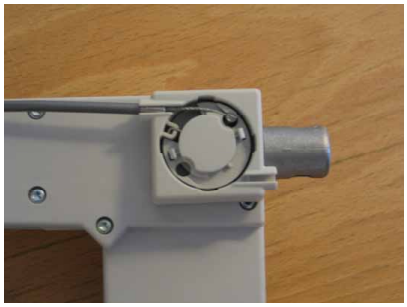

Here the cover is removed and the cable mounting can be seen

Replacement of QR cover

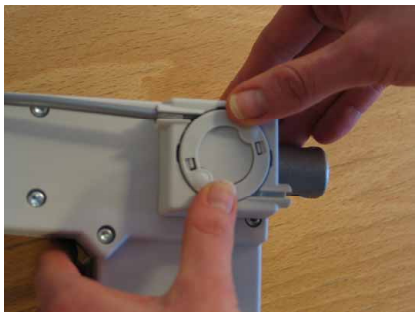

Use only a small amount of pressure to replace the QR cover

Max. angle of movement

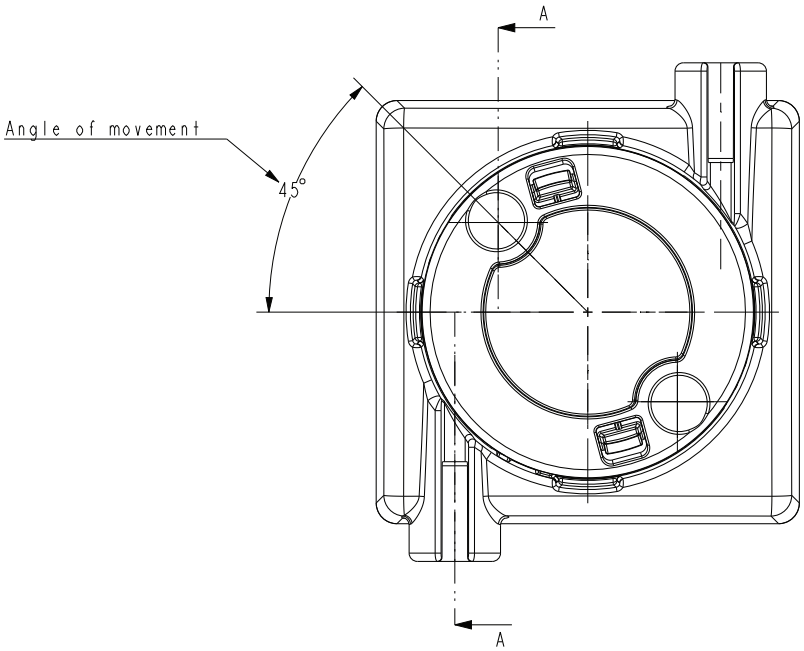

Drawing no.: 031944

Information

To ensure operation the Quick Release must be rotated 45° (max.) due to tolerance/load variation. Some units may operate before 45° is reached.

To avoid damaging the QR, it should not go above 45°.

After operating the quick release function, it is necessary to unload the actuator before normal function is re-obtained.

Recommendations

- The release cable has to be provided by the customer.
- The design of the release cable has to be as specified.
- It is important to observe the max. active (the moving part of the cable) cable length of 12mm. Do not pull more than this length otherwise the QR will be damaged!
- The force required to operate the Quick Release is approx. 5 kg.
- When more than the recommended 5 kg force is used to activate the QR, more friction will be created in the internal actuator/QR mechanism. This means that a greater load will be required to ensure successful operation.
- The QR cover is supplied attached to the actuator but not mounted.
- LA31 with external quick release, types I, K, L, and M can maximum pull 200N.
- The necessary release force on an actuator with 5mm pitch is 75 kg for 6 mm pitch = 50 kg.
- It is not possible to combine splines with the external quick release.
- LA31 with quick release is always with brake (push).
- The flexible back fixtures (05 or 06) must be standard when the LA31 is equipped with quick release.
- LA31 with brake:
  An LA31 brake in a push application brakes actively when the actuator moves in an inward direction. The same applies to an actuator mounted with a brake in a pull direction. It brakes in an outward direction. Under this condition the standard motor uses up to 4 Amp. and the fast motor uses up to 6 Amp. (Measured after 5 cycles at normal room temperature). Therefore, if the LA31 with brake is used together with a CB7, it is important that the current cut-off limit of the control box is higher than the used Amp. i.e. not lower than 4 Amp.
- For all LA31 actuators with brake self-locking ability up to max. load it is only possible in one direction: push or pull.
- The LA31 actuator must not be exposed to more than 4000 N in pull. In applications where misalignments may occur the normal back fixture can take max. 1500 N in pull whereas the flexible back fixture can take up to 4000 N in pull. The actuator must be mounted at right angles(90º) to its fixing/load (max. 1.5º deviation).
- LA31 actuators with protection class IPX6 must be mounted with the screw holes mounted faced downwards. This is to ensure that any water remaining from cleaning/washing is not collected in the screw holes.

Correct mounting

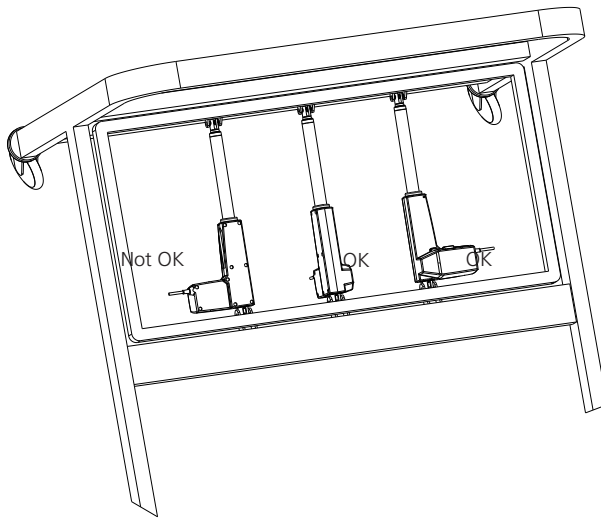

Drawing number: 31I080

Warnings

- The actuator must not be used in pull applications when the Quick Release is activated, as the risk of personal injury can arise.
- Bowden cable must click twice, in order to be locket sufficiently.
- Do not sideload the actuator
- Inspect the actuator minimum once a year for wear and jarring sound.
- The actuator is not designed for repeated dynamic push-to-pull movement.

LA31 with mechanical end stop - a first failure safe option

In many applications our customers have approvals according to EN 60601-1.

The typical applications can be beds, massage couches etc.

In the norm, EN 60601-1, it is mentioned that the application must be first failure safe. The manufacturer is responsible for making a risk analysis in order to check this. If a risk is identified, it is the manufacturer of the application who makes sure that the risk is eliminated.

There are several ways that an application can be made first failure safe:

- Use a mechanical stop in the application.
- Use of a mechanical end stop in LA31 is a possible option.
- Use an SLS (safety limit switch) in connection with the actuator.
- As a special solution we can offer LA31 with mechanical end stop with the same installation dimension as a standard LA31.

Warnings

To avoid damage to the actuator

- When the application is in the "rest" position there should be no load/tension on the actuator.
- If electrical end stop fails to function, the actuator will continue to retract or extend until mechanical end stop is reached.
- The application of the customer must be able to obtain or withstand an actuator with failing electrical end stop.
- Minimum length of actuator reaching mechanical end stop: nominal BID - 7 mm.
- Maximum length of actuator reaching mechanical end stop: nominal BID + nominal SL + increase + 7 mm.

LA34

LA34 is a technological state-of-the-art actuator that, due to its innovative construction can push up to 10000 N at a speed of 5 mm/sec. and with a current consumption of approx. 7 Amp. The strong LA34 actuator is made in a low weight composite material.

Its compact design, the outstanding performance and a wide range of safety options makes LA34 the right choice for a variety of medical and industrial applications.

The LA34 24V actuator is approved according to IEC 60601-1, ANSI / AAMI ES60601-1, and CAN / CSA-22.2 No 60601-1.

Options

- Mechanical spline: When using the actuator in a vertical position, the force needed to activate the mechanical spline is maximum 60N + the weight of the application. To reengage the spline function, a force of maximum 60N is needed. Same installation dim. as standard actuator.
- A modified Bowden cable holder is available (as a special article), with better cable alignment and improved guidance of the cables.
- Electric spline: When using the actuator in a vertical position, the force needed to activate the electric spline is maximum 100N + the weight of the application. To reengage the spline function, a force of maximum 100N is needed.

Usage

Duty cycle:	2/18 – 2 minutes continuous use followed by 18 minutes not in use
Ambient temperature:	+5 °C to +40 °C
Compatibility:	Compatible with LINAK control boxes. Please contact LINAK.
Approvals:	IEC60601-1 ANSI / AAMI ES60601-1 CAN / CSA-22.2 No 60601-1 for LA34 24V.

Recommendations

- Power supply without current cut-off can cause serious damage to the actuator if mechanical stop is encountered or the actuator movement is blocked in another way.
- LINAK control boxes are designed so that they will short-circuit the motor terminals (poles) of the actuator(s) when the actuator(s) are not running. This solution gives the actuator(s) a higher self-locking ability. If the actuator(s) are not connected to a LINAK control box the terminals of the motor must be short-circuited to achieve the self-locking ability of the actuator.
- The choice of the compact housing will increase the cable length by approx. 75 mm.
- It is not possible to combine electrical splines with quick release in pull.

Warnings

- An LA34 actuator is not designed for repeated dynamic push-to-pull movements. This cause extra strain to the actuator and can give safety considerations, the consequence being possible damage to the actuator. Therefore, if repeated dynamic push-to-pull movements are essential for the application, perform tests to validate the performance and use a steel piston rod eye (contact LINAK A/S).
- LA34 actuators for patient hoists are marked with a label to ensure the user is aware that it is not permitted to handle the patient hoist by pulling the actuator or otherwise expose it to side forces.

- Please ensure, when replacing the LA34 zinc actuator with an LA34 composite actuator, that a test is made in the application. All changes from zinc to composite, with the special option Quick Release, has to be ordered using the sample order flow (CP9).
- If electrical end stop fails to function, the actuator will continue to retract or extend until mechanical end stop is reached.
- The customer's application must be able to take up or withstand an actuator with failing electrical end stop.
- Products equipped with a mechanical spline can be manually extended beyond their specified stroke length. This may occur, for example, if the beam of a patient lift is lifted manually without operating the actuator. If the spline is extended in this manner, the spline nut may press against the mechanical end stop of the spindle and appear to be locked. However, it is not securely seated.
  When a load is applied or the actuator is operated, the spline nut can disengage unexpectedly and return to its intended position, causing a rapid and uncontrolled drop.

LA34 with quick release

LA34 is available with quick release as an option. The quick release is mounted on the motor part.

The quick release is e.g. used for emergency lowering on a patient lift or for manual lowering of the head part of a bed.

The quick release is available with a manual activation where a finger grip is mounted on the actuator. When pulling the finger grip the declutching is activated.

To release the handle it is necessary to pull approx. 10 mm with 80-100 N.

The function can also be extended with one or two bowden cables which are connected to the finger grip. Below the finger grip there is an adjusting screw to increase or decrease lowering speed.

After operating the quick release function, it is necesseary to unload the acutator before normal function is re-obtained.

The adjusting screw is adjusted from the factory in accordance with the table below.

The table below shows the standard adjustment criteria.

Motor type	Spindle type	Adjustment load	Speed criteria
Standard/fast (24 V)	3-threaded (12 mm pitch)	6000 N	15-55 mm/s
	4-threaded (16 mm pitch)	5000 N	
	5-threaded (20 mm pitch)	4000 N	

Table notes:

- Speeds are measured for an 80 mm distance.
- The ambient temperature is 20 degrees Celcius.

Note: The QR speed at a certain load is dependent on multiple parameters such as: ambient temperature, number of activations, wear, whether the actuator has run just prior to a QR engagement.

Potentiometer

Item	Specification	Comment
Description	The actuator can be equipped with a potentiometer for precise positioning. The potentiometer is a variable resistance, the magnitude of which varies linearly with the position of the actuator rod.	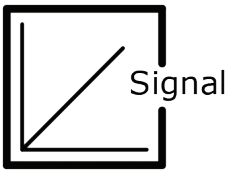
Type for LA34 Composite	ALPS RDC40, 0-10 kOhm ±30%, linearity ±1%	
Type for LA34 Zink	Bourns 3590S, 0-10 kOhm ±20%, linearity ±0,25%	
Input voltage	3.3V recommended	
Pin configuration	LA34 Mini-fit plug cable (potentiometer) Potentiometer Pin1: Pot GND Pin2: Vbus Pin3: M+ (Motor/Power) Pin4: Pot Position Pin5: Pot + (3V3) Pin6: M- (Motor/Power)	PCBA header top view 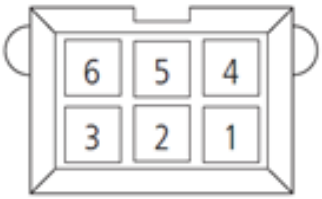
Combinations	The potentiometer cannot be combined with electric spline.	

LA34 with potentiometer

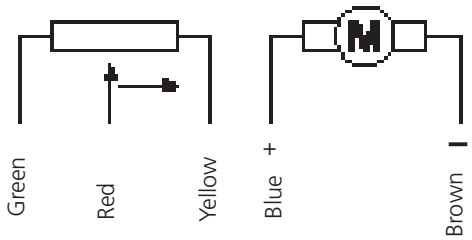

Hall

Item	Specification	Comment
Description	The actuator can be equipped with dual Hall that gives a relative positioning feedback signal when the actuator moves.	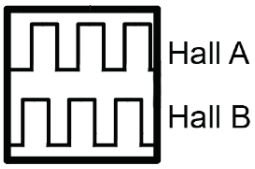
Input voltage	4-15V	Feedback circuit has to be powered 50ms before driving, and until the actuator has stopped moving.
Current	Maximum 20mA. See diagram.	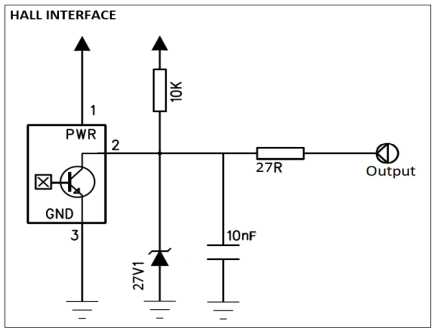
Pin configuration	LA34 Mini-fit plug cable (Hall)	PCBA header top view

	Hall
Pin1	Hall GND
Pin2	Vbus
Pin3	M+ (Motor/Power)
Pin4	Hall A
Pin5	Hall B
Pin6	M- (Motor/Power)

LA34 with pulse system

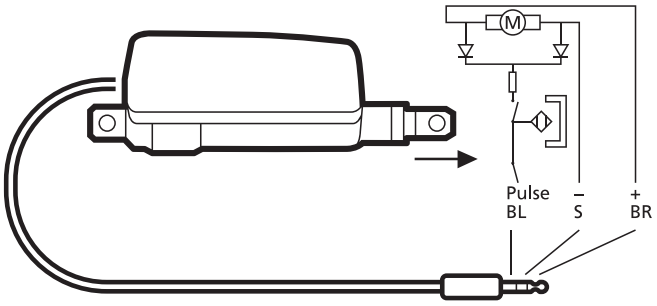

LA34 with electronic pulse coder (reed switch)

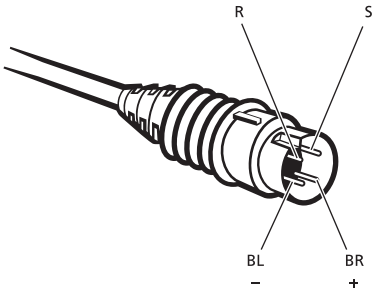

As there is friction in the spindle/gear system, the customer has the possibility to increase the speed by adjusting the Quick Release screw so that the actuator can release at a lower load in accordance with the tabel below:

The values are as follows:

Type	Normal and fast motor
LA34 - 12mm pitch	180 kg
LA34 - 16mm pitch	120 kg
LA34 - 20mm pitch	96 kg

Any adjustments should be done with consideration and based on tests in the application. If the customer needs the actuator to be adjusted to a different load, it has to be ordered as a special article.

LA40

The LA40 is a low noise and powerful actuator which is available in a 1,500 N, 4,000 N, 6,000 N and an 8,000 N version.

With the LA40, LINAK offers a new durable actuator with high speed/high performance and mechanical endstop for first failure safety making it the right choice for the future market. The LA40 versions are rated up to IPX6 Washable DURA™, except for the LA40 PL version which is rated up to IPX6.

The LA40 8,000 N is available in four versions

- Standard
- High Performance (HP)
- Patient Lift (PL)
- Quick Release (QR)

Usage

Duty cycle:	10%, 2 minutes continuous use, followed by 18 minutes not in use
Usage temperature:	5 °C to 40 °C
Storage temperature:	-10 °C to 50 °C
Compatibility:	Compatible with LINAK control boxes. Please contact LINAK.
Relative humidity:	20% to 80% - non-condensing
Atmospheric pressure:	700 to 1,060 hPa
Height above sea level	Max. 3,000 meters
Flammability rating:	UL94V-2
Approvals:	IEC 60601-1 ANSI/AAMI ES60601-1 CAN/CSA-C22.2 No 60601-1

The product is not designed for dynamic load changes (from push to pull or vice versa). If the application design requires a product with a dynamic load change capability, please contact LINAK for investigation of product feasibility or guidance.

Warnings

- The installation of spline actuators is recommended by LINAK where possible to avoid the squeezing of body parts.
- The safety option manual lowering makes it possible to turn the inner tube down by hand in emergency cases or if electrical power is not available.
- Activation of a quick release can lead to a risk of squeezing body parts. Installation of a damper may reduce this risk.
- A quick release can accidentally be activated during mounting or maintenance. To avoid this, operators must be warned before service/mounting.
- End of life issue: defective switches - endstop:
  If the electrical endstop switch for outward operation fails, it may cause a prolonged actuator stroke and in addition the customer application may collapse. To avoid this, the manufacturer must take this into account when designing and making a risk analysis.
- If electrical endstop fails to function the actuator will continue to retract or extend until mechanical endstop is reached. The application of the customer must be able to obtain or withstand an actuator with failing electrical endstop.
  Minimum length of actuator reaching mechanical endstop: BID - 7 mm.
  Maximum length of actuator reaching mechanical endstop: BID + SL + 7 mm.
- If the actuator does not work as intended, there is a risk of injury. Therefore, the actuator must immediately be sent to the nearest authorised LINAK workshop for service.
- The actuator is not designed for repeated dynamic push-to-pull movement.

Recommendations

- Power supply without current cut-off can cause serious damage to the actuator if a mechanical stop is encountered or the actuator movement is blocked in another way.
- Connection bolts must be dimensioned so that they have the necessary strength and tolerance in order to obtain the minimum safety factor according to the requirements of the authorities.
- The actuator must not be subject to a side load, as this can cause bending/collapse of the actuator. The actuator must never be used as a handle.
- The actuator must not be subject to off-centre loading, as this can cause bending/collapse of the actuator.
- The actuator must not be subject to impact, or any form of stress to the casing.
- The actuator must not be subject to overload, as this can reduce the lifetime of the actuator and in the worst case cause damage to the actuator.
- Only use the actuator within the specifications.
- Connection bolts and brackets are to be inspected in connection with service, and must be replaced if there are signs of wear.
- Ensure that the cable lock is mounted correctly.
- Ensure that the duty cycle and the usage temperatures for LA40 actuators are respected.
- Ensure that the cable cannot be squeezed, pulled or subjected to any other stress.
- The LA40 is not suitable for use in outdoor applications where it can be exposed to sun and rain.

Recommendations

- LA40 with mechanical endstop - a first failure safe option:
  In many applications customers have approvals in accordance with EN 60601-1. The typical applications are beds, massage couches etc. The norm EN 60601-1 states that the application must be first failure safe. The manufacturer has the responsibility of carrying out a risk analysis in order to check this. If a risk is identified, the application manufacturer must ensure that this risk is eliminated. A switch cannot be first failure safe.
- Patient lift and stand aids:
  - Long installation dimension: must always be used for patient lifts.
  - Do not hold the inner or outer tube while the actuator is running. There can be a risk of squeezing between the manual lowering unit and the outer tube.
  - Always use the ratchet spline functions for patient lifts.
- LA40 8,000 N PL actuators for patient lifts are marked with a label to ensure that the user is aware that it is not allowed to pull the actuator or otherwise expose it to side forces when handling the patient lift.
- If the actuator is used in dynamic push and pull, noise and extended play in axial direction may occur during lifetime due to wear and tear.

- The max. pull load and guidelines for safety arrangements in accordance with the User Manual must be respected.
- If the damper is activated too frequently, there is a risk of reduced damping effect. Therefore, a 30-minute cool-down period is recommended.
- The damper functionality is not designed to work in environments with low temperatures (below 0 °C). The actuator may become defective and/or the damping effect may be reduced.
- If the load on the actuator is too low, the damper will not be activated and the actuator will work with quick-release effect only.
- If the load on the actuator is too low and the QR is activated (i.e. when a caregiver uses QR for cleaning purposes), high clicking sounds may occur during the actuator lowering. This is caused by the damper functionality and does not mean any actuator or damper damage.

Instruction concerning the turning of the piston rod eye

When mounting and taking into use, it is not permitted to turn the piston rod eye several times. In cases where the eye is not positioned correctly, the eye must be screwed to its bottom position (1) and then maximum half a turn outwards again (2).

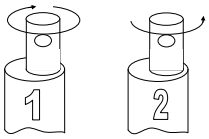

Mounting bracket instructions

To avoid damage to the actuator, it is important that the actuator drives to the application endstop position and continues to operate in the groove until it activates the electric actuator endstop.

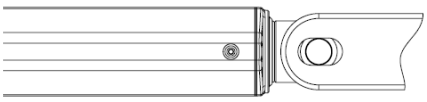

To avoid accumulated water inside the quick release lid (see illustration) it is recommended not to mount the LA40 quick release actuator with the lid in downward position.

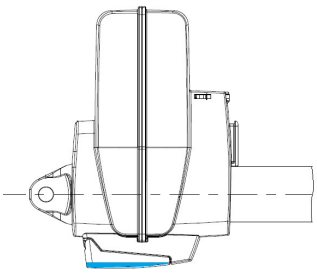

Manual lowering

The picture to the right illustrates the manual lowering procedure.

In case of a power failure, it is possible to mechanically lower a patient placed in a patient lift. When turning the manual lowering handle clockwise, the actuator can be moved fully inwards.

After operating the manual lowering function, it is necessary to unload the actuator before normal function is re-obtained.

Note: The manual lowering unit can rotate up to 1.5 revolutions while running the actuator outwards.

Spline

- Required minimum push load 200 N on the actuator to allow inward movement (otherwise the spline can be activated) (picture 1)
- Required activation pull force during inward operation:
  <100 N to activate the ratchet spline to avoid squeezing situations. (picture 2)
- For QR versions:
  Force required to manually activating spline (actuator not in operation): Static pull force = 300-550 N.
  For manual pull out (extend) of the inner tube. (picture 3)

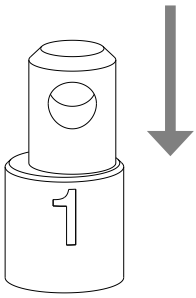

Push:

200 N
(Ratchet spline for
HP and PL versions)

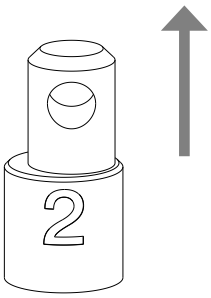

Pull:

<100 N
(Ratchet spline for
HP and PL versions)

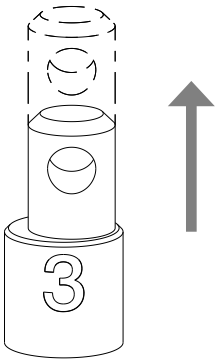

Pull:
300- 550 N
(Ratchet spline for
QR versions)

Intelligent Ratchet Spline

(only valid for LA40 HP)

This functionality differs from the standard spline functionality by allowing software-based customisation of how the actuator responds to pull forces.

Damper function

The LA40 QR can be equipped with an internal damper mechanism. The damper inside the LA40 provides a slower lowering speed, compared to the normal QR lowering speed which is faster.

When the QR is activated, with the existence of a certain amount of push load, the spindle rotation speed will engage the Damper mechanism and will start a slower lowering. The speed when the damper is activated will be load dependent and the damper is only acting as an extra friction when QR-lowering is activated.

Mounting of the quick release cable

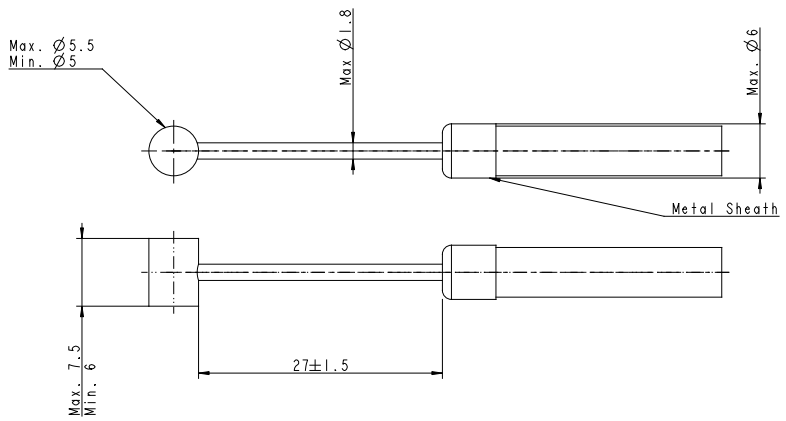

Cable dimensions inside the quick release housing required to ensure correct operation.

Drawing no.: 0404016-1

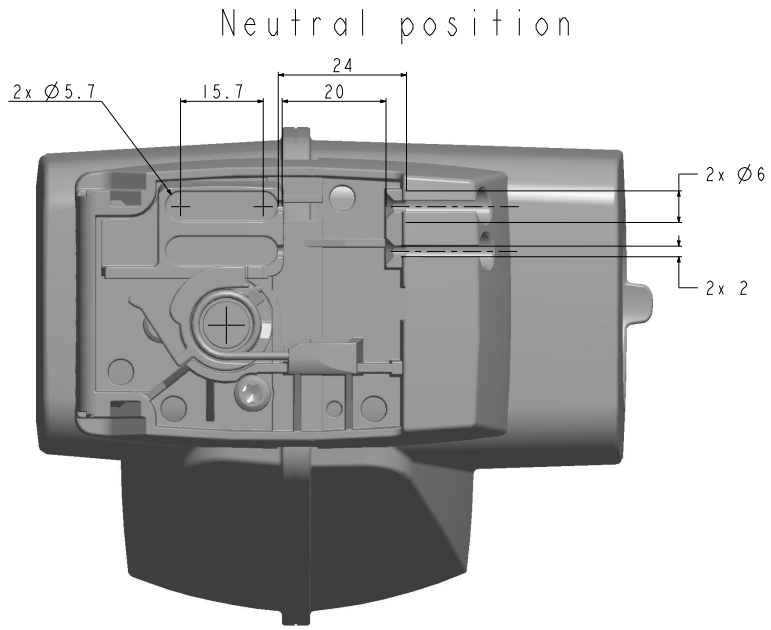

Quick release mechanism in its neutral position.
Note that the cable fixture has a maximum travel distance of 20 mm until it hits the housing wall that acts as end stop.
The application design must ensure that the quick release cable cannot be pulled the full travel to end stop with excessive pull force. This is to protect the quick release unit.

Drawing no.: 0404043

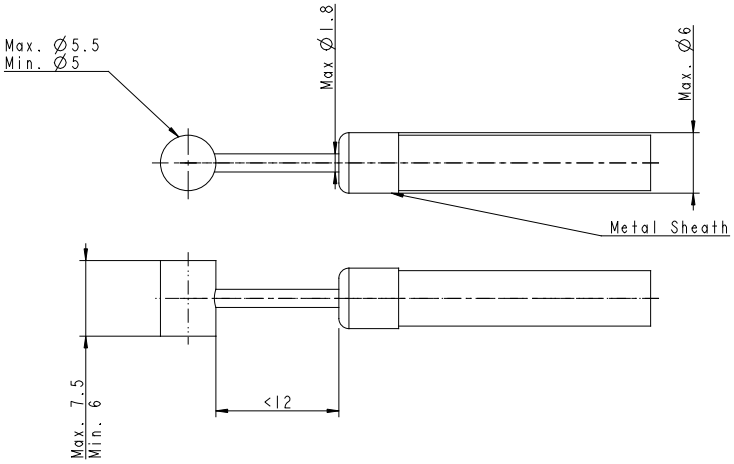

When the cable is pulled, the quick release is activated with certainty when the cable has less than 12 mm travel distance to give.

Drawing no.: 0404016-2

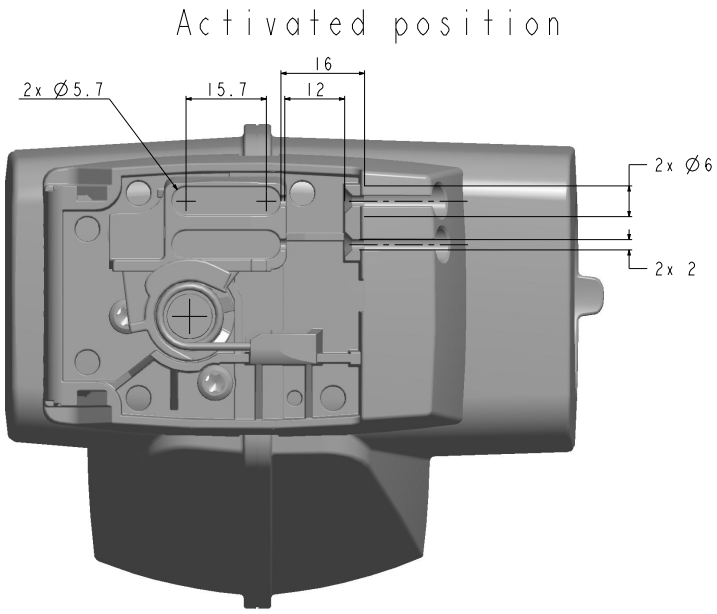

At the point when the quick release is activated with certainty, the cable fixture has 7 mm travel left before it hits the end stop.

Drawing no.: 0404043

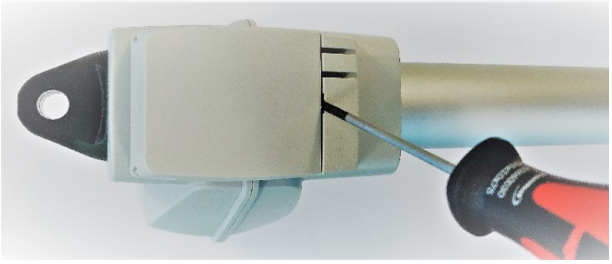

Make sure that the actuator is unloaded at its fully retracted position!

Open the quick release lid using a flat-head screwdriver. Push and tip to release the lock.

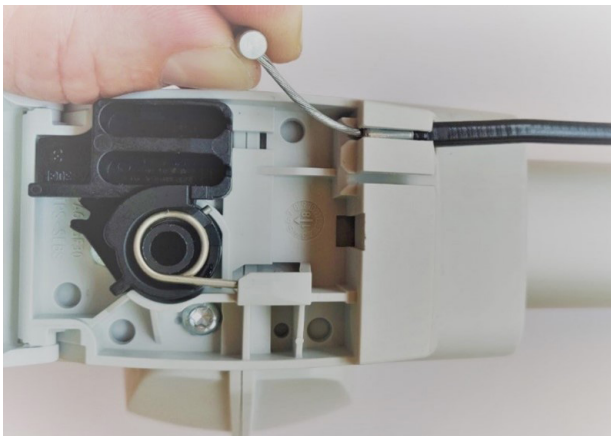

Run the cablethrough the slot of the mounting hole for the jacket collar. Pull the cable until the jacket collar is in place.

If needed, support the cable jacket by holding it so that it stays in the mounting hole for the jacket collar.

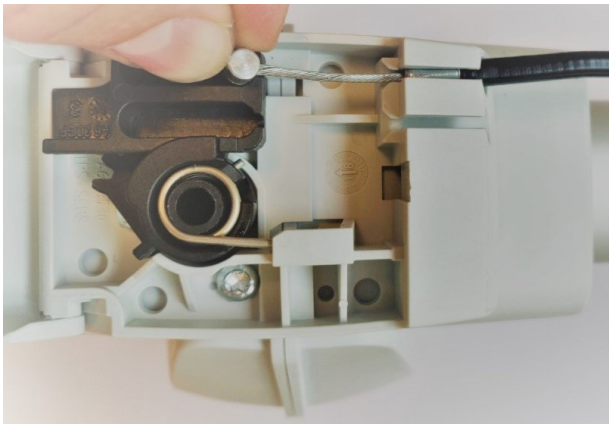

Place the cylindrical cable end in the cable fixture.

Repeat the procedure if two release cables are used.

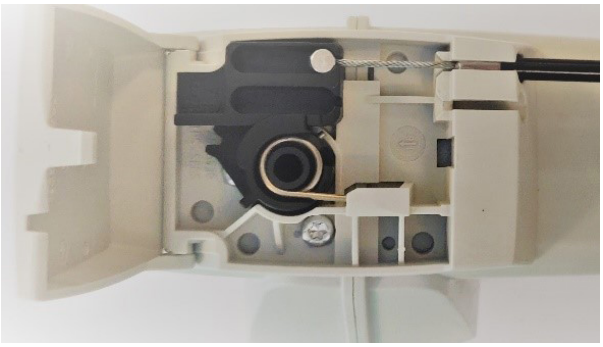

If the cable is equipped with a barrel adjuster mechanism at the opposite cable end, then use it to adjust the cable to the recommended cable length. See drawing no. 0404016-1.

Verify that the quick release mechanism is completely released when the cable is not pulled. Also verify that the cable can be pulled almost to the endstop.

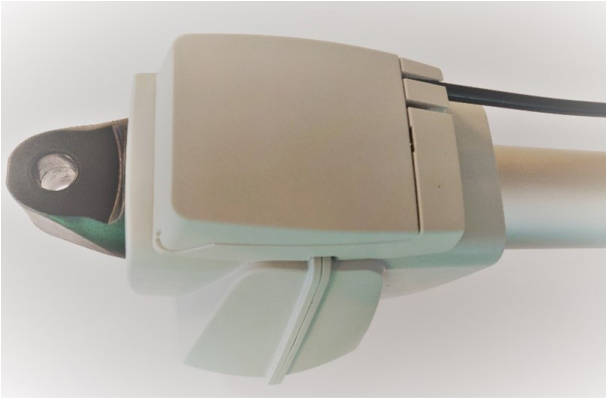

Close the lid.

Now test that the quick release is functional by pulling the cable with the actuator extracted.

Approximate force required to operate the quick release:

55 N at an actuator load of 750 N

90 N at an actuator load of 4,000 N

When operating the quick release function, the quick release must be activated all the way down and not stopped halfway.

After operating the quick release function, it is necessary to unload the actuator before normal function is re-obtained.

Feedback specifications

E2 (Signal)	
1	NC
2	COMMON EOS*
3	M+ (Motor/Power)
4	EOS IN
5	EOS OUT
6	M- (Motor/Power)

*EOS equal to end of stroke

E3 (Encoded)	
1	GND
2	VCC
3	M+ (Motor/Power)
4	Analogue encoded (Hall-A+EOS* IN/OUT)
5	NC
6	M- (Motor/Power)

Analogue encoded	EOS
2.65V-3.25V	NONE
2.15V-2.65V	NONE
1.65V-2.15V	OUT
1.15V-1.65V	OUT
0.65V-1.15V	IN
0.05V-0.65V	IN

*EOS equal to end of stroke

E3 (Encoded) F3 (dual Hall encoded)	
1	GND
2	VCC
3	M+ (Motor/Power)
4	Analogue encoded (Hall-A+EOS* IN/OUT)
5	Hall B
6	M- (Motor/Power)

Interval	Hall-A	EOS
2.65V-3.25V	LOW	NONE
2.15V-2.65V	HIGH	NONE
1.65V-2.15V	LOW	OUT
1.15V-1.65V	HIGH	OUT
0.65V-1.15V	LOW	IN
0.05V-0.65V	HIGH	IN

*EOS equal to end of stroke

E1 (Power switch)	
1	NC
2	NC
3	M+ (Motor/Power)
4	NC
5	NC
6	M- (Motor/Power)

E1 (Power switch) F2 (dual Hall digital) See next page	
1	GND
2	VCC
3	M+ (Motor/Power)
4	Hall A
5	Hall B
6	M- (Motor/Power)

Feedback specifications

Dual Hall, Encoded (F3) is used only for LINAK A/S control boxes.

Dual Hall, digital (F2) is used for not LINAK A/S control boxes.

Potentiometer (F6).

<table>
<tr><th>Item</th><th>Specification</th><th>Comment</th></tr>
<tr><td>Pin configuration</td><td><table><tr><td>Pin1</td><td>GND</td></tr><tr><td>Pin2</td><td>VCC</td></tr><tr><td>Pin3</td><td>M+</td></tr><tr><td>Pin4</td><td>HALL A</td></tr><tr><td>Pin5</td><td>HALL B</td></tr><tr><td>Pin6</td><td>M-</td></tr></table></td><td>Connector in LA40 housing:
 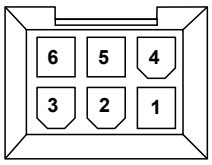
</td></tr>
<tr><td>VCC</td><td>4-15V</td><td>Feedback circuit has to be powered 50ms before driving, and until actuator has stopped moving</td></tr>
<tr><td>Current</td><td>Maximum 15 mA @10kΩ and 1nF load.
See diagram.</td><td> 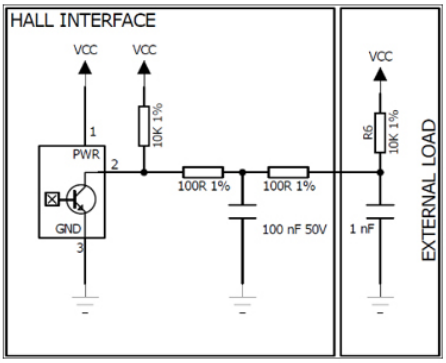
</td></tr>
<tr><td>HALL A/B</td><td>TState is minimum 5 ms in all states (11,10,00,01)

Duty cycle Hall A 30-70%
Duty cycle Hall B 30-70%

Low level <GND+0.5V @10kΩ and 1nF load
High level >VCC-0.5V @10kΩ and 1nF load

Driving out, the Hall B signal will go high when Hall A signal is low.

Driving in, the Hall A signal will go high when Hall B signal is low.w</td><td>Driving out:
 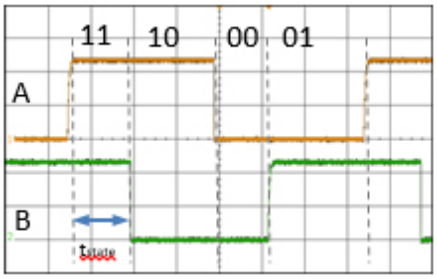

Driving in:
 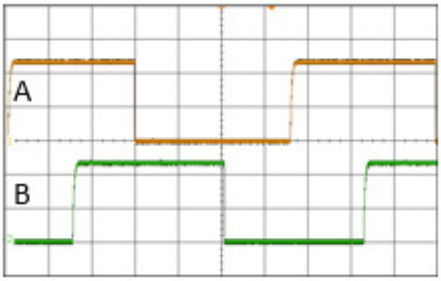
</td></tr>
<tr><td>Resolution</td><td>The feedback system gives 16 state shifts per spindle turn.
3 mm pitch => 0.1875mm per shift
4 mm pitch => 0.25mm per shift</td><td>On 100 mm stroke you will have the following number of pulses:
3 mm pitch => 533 shifts
4 mm pitch => 400 shifts</td></tr>
</table>

E1 (power switch) F6 (potentiometer)	
1	GND
2	NC
3	M+ (motor/power)
4	Potentiometer feedback
5	VCC
6	M- (motor/power)

Feedback specification	
VCC max.	5 V
Resistor	8-12 kΩ
Linearity (±2% of *maximum stroke)	±5.8 mm
Precision (±5% of *maximum stroke)	±14,5 mm

Calculation of maximum stroke length	
Gearing	4
Spindle pitch	5 mm/rev
Total turns on potentiometer	14.5 turns
*maximum stroke	280 mm

E2 (signal) F6 (potentiometer)	
1	GND (common EOS*)
2	VCC
3	M+ (Motor/Power)
4	Potentiometer feedback
5	EOS* IN/OUT
6	M- (Motor/Power)

* EOS equal to end of stroke

Feedback specification LINAK A/S system	
Linearity (±2% of *maximum stroke)	±5.8 mm
Precision (±5% of *maximum stroke)	±14,5 mm

Calculation of maximum stroke length	
Gearing	4
Spindle pitch	5 mm/rev
Total turns on potentiometer	14.5 turns
*maximum stroke	280 mm

LA42

The LA42 is a strong and flexible actuator with a push load of up to 7,000 N (6,000 N after first 50 mm) and a dynamic load pull of 3,500 N, offering stable and reliable performance. The motor housing offers the ability to customise the motor direction, allowing designers more options for placement in applications.

Usage

Operation temperature:	+5 °C to +40 °C
Storage temperature:	-10 °C to +50 °C
Compatibility:	Compatible with LINAK control boxes with Power Communication Port (PCP 2.0 only)
Relative humidity:	20% to 80% – non-condensing
Atmospheric pressure:	700 to 1060 hPa
Height above sea level:	Max. 3000 meters
Duty cycle:	10%, 2 minutes continuous use, followed by 18 minutes not in use
Flammability rating:	UL94V-0
Approvals: (pending)	IEC60601-1 ANSI/AAMI ES60601-1 CAN/CSA-22.2 No 60601-1

Calibration

To keep its size as small as possible, LA42 is designed to calibrate its Hall position by using hard stops that spike the current, rather than signal switches. In rare circumstances, the LA42 can lose its position and may require recalibration on these hard stops outside of the normal operating stroke range. Because of this, it is important to design an additional 4 mm of stroke allowance on both sides of the standard operating stroke length for the actuator to move into its hard stop and calibrate.

Example:

If stroke is 200 mm and BID is 344 mm (rod eye with slot), the standard operating stroke length is from 344 mm to 544 mm. In this case, the mechanical design of the system should allow for movement between 340 mm and 548 mm, so the actuator has room to recalibrate if it loses position.

Feedback specifications

Dual Hall, Encoded (F3) is used only for LINAK A/S control boxes.

Dual Hall, digital (F2) is used for third-party control boxes.

Dual Hall, digital (F2) positioning (Platform option 0 “None” only).

<table>
<tr><th>Item</th><th>Specification</th><th>Comment</th></tr>
<tr><td>Pin configuration</td><td><table><tr><td>Pin 1</td><td>GND</td><td>Black</td></tr><tr><td>Pin 2</td><td>VCC</td><td>Red</td></tr><tr><td>Pin 3</td><td>M+</td><td>Brown</td></tr><tr><td>Pin 4</td><td>HALL A</td><td>Yellow</td></tr><tr><td>Pin 5</td><td>HALL B</td><td>Green</td></tr><tr><td>Pin 6</td><td>M-</td><td>Blue</td></tr></table></td><td>Flying leads included when platform option 0 “None” is selected with cable type E</td></tr>
<tr><td>VCC</td><td>4-15V</td><td>Feedback circuit has to be powered 50ms before driving, and until actuator has stopped moving</td></tr>
<tr><td>Current</td><td>Maximum 15 mA @10kΩ and 1nF load.
See diagram.</td><td> 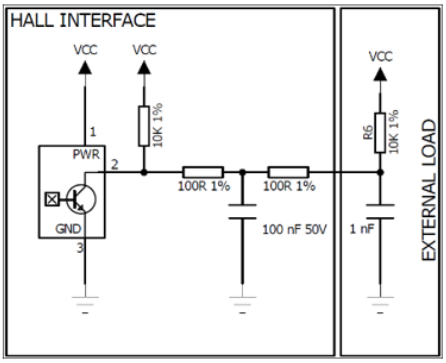
</td></tr>
<tr><td>HALL A/B</td><td>TState is minimum 5 ms in all states (11,10,00,01)

Duty cycle Hall A 30-70%
Duty cycle Hall B 30-70%

Low level <GND+0.5V @10kΩ and 1nF load
High level >VCC-0.5V @10kΩ and 1nF load

Driving out, the Hall B signal will go high when Hall A signal is low.
Driving in, the Hall A signal will go high when Hall B signal is low.</td><td>Driving out:
 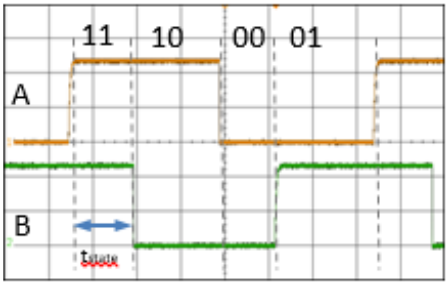

Driving in:
 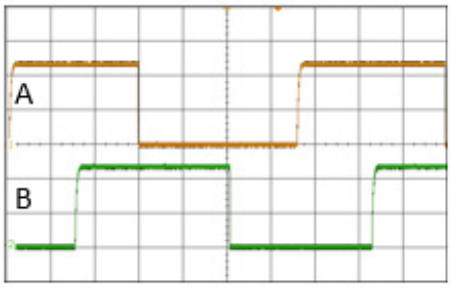
</td></tr>
</table>

Warnings

- If the actuator does not work as intended, there is a risk of injury. Therefore, the actuator must immediately be sent to the nearest authorised LINAK workshop for service.
- The actuator is not designed for repeated dynamic push-to-pull movement.
- The LA42 is classified as a "no MOPP" actuator. This means that there is no insulation between the input power and the accessible piston rod. When using multiple LA42 actuators in a system, it is crucial to mitigate the risk of an operator or patient being in contact with more than one actuator in risk management for approvals. This can be done through measures such as protective covers, adequate distance etc.

Recommendations

- The actuator must not be subjected to side load as this can cause bending/collapse of the actuator. The actuator must never be used as a handle.
- The actuator must not be subjected to off-centre loading as this can cause bending/collapse of the actuator.
- Do not turn the piston rod eye due to virtual initialisation of the stroke length. There is a risk of position lost. Reinitialisation is required.
- Only use the actuator within the specification.
- It is necessary to follow the Technical Disclaimer if a third-party control box is used with the LA42.

LA44

The LA44 is available in powerful 10,000 N and 12,000 N versions, ensuring safe patient handling.

With the LA44 actuator, LINAK offers a product, which with its wide range of safety options, low noise level, and outstanding performance is the right choice for medical applications such as patient lifts, beds, dental chairs etc.

Usage

Electrical spline functionality:	Electrical spline; can be combined with manual lowering. The Electrical-spline switch is mounted inside LA44. It activates on a pulling movement of the slightly moveable back fixture. When using the actuator in a vertical position, the force needed to activate the electric spline is maximum 100N + the weight of the application. To reengage the spline function, a force of maximum 100N is needed.
Mechanical spline functionality:	When using the actuator in a vertical position, the force needed to activate the mechanical spline is maximum 60 N + the weight of the application. To reengage the spline function, a force of maximum 60 N is needed.
Duty cycle:	10%, 2 minutes continuous use followed by 18 minutes not in use
Usage temperature:	5 °C to 40 °C
Storage temperature::	-10 °C to +50 °C
Compatibility:	Compatible with LINAK control boxes. Please contact LINAK.
Approvals:	IEC 60601-1 ANSI/AAMI ES60601-1 CAN/CSA 22.2 No 60601-1

Recommendations

- The actuator is not suitable for outdoor applications
- Power supply without current cut-off can cause serious damage to the actuator if a mechanical stop is encountered or the actuator movement is blocked in another way.
- If there is a risk of "pull forces" in the application, the actuator must be equipped with mechanical or electrical spline to avoid damage in pull.
- If the actuator is operated without load (e.g. loose on a table) the electrical spline can activate and the actuator cannot run in an inwards direction. Push the back fixture and the actuator can be operated again.
- Connection bolts must be dimensioned so that they have the necessary strength in order to obtain the minimum safety factor according to the requirements of the authorities.
- The actuator must not be subject to a side load, as this can cause bending. It is also for this reason that the actuator should not be used as a handle, e.g pulling a patient hoist sideways.
- The actuator must not be subject to off centre loading, as this can damage the actuator.
- The actuator must not be subject to impact, or any form of stress to the casing.
- The actuator must not be subject to overload, as this can reduce the lifetime of the actutor and in the worst case cause damage to the actuator.
- The actuator must not be used in pull applications, as this can cause collapse.
- Only use the actuator within the specified working limits.
- It is recommended that the actuator is serviced according to the relevant national norms for the applications in which the actuator is used.
- Connection bolts and brackets are to be inspected in connection with service, and must be replaced if there are signs of wear.
- The safety function: Electrical Spline, should be checked in connection with service. The function is checked by applying a straight pull, of max. 100 N, to the back fixture. The actuator must not be able to run in an inward direction. Hereafter press the back fixture against the housing and the actuator can run in an inward direction.
- The actuator should be cleaned regularly, in order to maintain a good hygiene.

LA44 actuators for patient hoists are marked with a label to ensure the user is aware that it is not permitted to handle the patient hoist by pulling the actuator or otherwise expose it to side forces.

Self-locking ability

LINAK control boxes are designed so that they will short-circuit the motor terminals (poles) of the actuator(s), when the actuator(s) are not running. This solution gives the actuator(s) a higher self-locking ability. If the actuator(s) are not connected to a LINAK control box, the terminals of the motor must be short-circuited to achieve the self-locking ability of the actuator.

Manual lowering

The following pictures illustrate

a) The manual lowering procedure and

b) How to fit and remove the plug connection using the "Smart cable lock"

In case of a power failure it is possible to mechanically lower a patient placed in a patient hoist.

When turning the manual lowering handle clockwise the actuator can be moved fully inwards.

NOTE:

It can be observed that the manual lowering unit can rotate up to 1.5 revolutions while running the actuator outwards.

After operating the manual lowering unit, it is necessary to unload the actuator before normal function is re-obtained.

Fitting the plug / smart cable lock

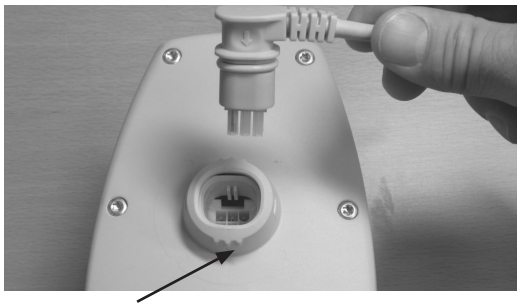

Step 1:
The three flanges in this position indicate that the "smart cable locking" device is in the unlocked position.

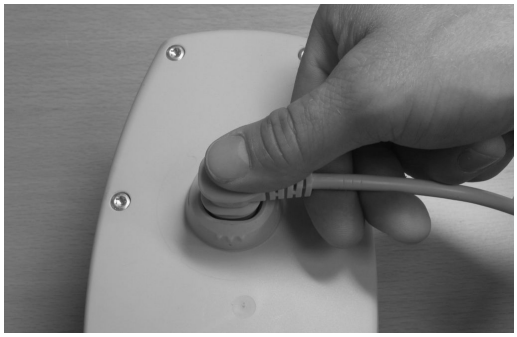

Step 2:
Position and press the cable plug into the socket.

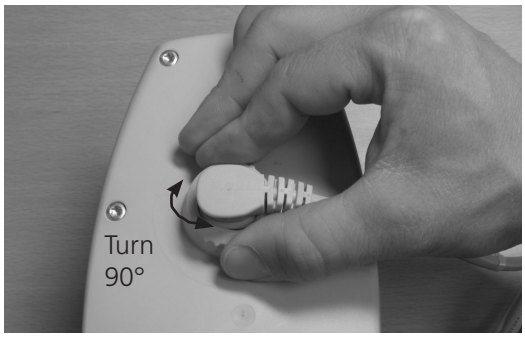

Step 3:
Hold around the lock flanges and turn the lock either clockwise or anticlockwise.
The cable is fully locked when turned 90°.

Feedback specifications - Potentiometer

Item	Specification	Comment
Description	The actuator can be equipped with a potentiometer for precise positioning. The potentiometer is a variable resistance, the magnitude of which varies linearly with the position of the actuator rod.	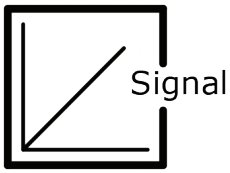
Type	ALPS RDC40, 0-10 kOhm ±30%, linearity ±1%	
Input voltage	3.3 V recommended	
Pin configuration	LA44 Mini-fit plug cable (potentiometer) **Potentiometer** Pin1: Pot GND Pin2: Vbus Pin3: M+ (Motor/Power) Pin4: Pot Position Pin5: Pot + (3V3) Pin6: M- (Motor/Power)	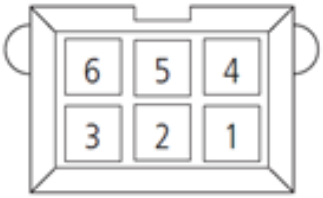
Combinations	The potentiometer positioning cannot be combined with LA44IC.	

Feedback specifications - Hall

Item	Specification	Comment
Description	The actuator can be equipped with Dual Hall that gives a relative positioning feedback signal when the actuator moves.	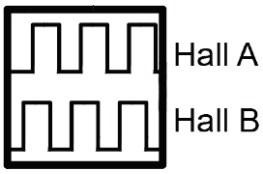
Input voltage	4-15V	The feedback circuit has to be powered 50 ms before driving and until the actuator has stopped moving
Current	Maximum 20 mA. See diagram.	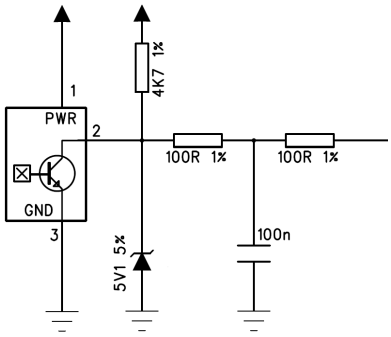
Pin configuration	LA44 Mini-Fit plug cable (hall) with feedback **Hall** Pin1: Hall GND Pin2: Vbus Pin3: M+ (Motor/Power) Pin4: Hall A Pin5: Hall B Pin6: M- (Motor/Power)	PCBA header top view 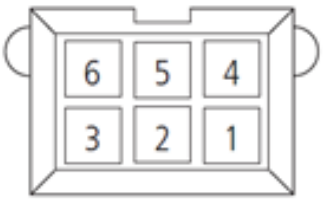

Unlocking the plug/smart cable lock

Flanges in locked position

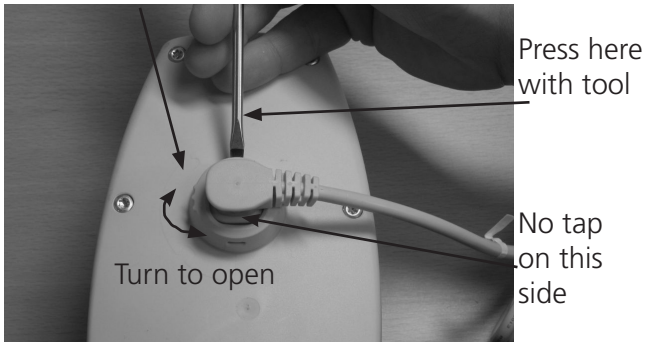

Using a tool, release the lock (must be from the side shown) by pushing the tap (through the small slot in the side of the lock).

At the same time, turn the lock 90º in either direction to release the plug connection.

Contacts

FACTORIES

Denmark - Headquarters
LINAK A/S
Phone: +45 73 15 15 15
Fax: +45 74 45 80 48
Fax (Sales): +45 73 15 16 13
Web: www.linak.com

China
LINAK (Shenzhen) Actuator Systems, Ltd.
Phone: +86 755 8610 6656
Phone: +86 755 8610 6990
Web: www.linak.cn

Slovakia
LINAK Slovakia s.r.o.
Phone: +421 51 7563 444
Web: www.linak.sk

Thailand
LINAK APAC Ltd.
Phone: +66 33 265 400
Web: www.linak.com

USA
LINAK U.S. Inc.
Americas Headquarters
Phone: +1 502 253 5595
Fax: +1 502 253 5596
Web: www.linak-us.com
www.linak-latinamerica.com

SUBSIDIARIES

Australia
LINAK Australia Pty. Ltd
Phone: +61 3 8796 9777
Fax: +61 3 8796 9778
E-mail: sales@linak.com.au
Web: www.linak.com.au

Austria
LINAK Zweigniederlassung - Österreich (Wien)
Phone: +43 (1) 890 7446
Fax: +43 (1) 890 744615
E-mail: info@linak.de
Web: www.linak.at - www.linak.hu

Belgium
LINAK Actuator-Systems NV/SA
(Belgium & Luxembourg)
Phone: +32 (0)9 230 01 09
E-mail: beinfo@linak.be
Web: www.linak.be - www.fr.linak.be

Brazil
LINAK Do Brasil Comércio De Atuadores Ltda.
Phone: +55 (11) 2832 7070
Fax: +55 (11) 2832 7060
E-mail: info@linak.com.br
Web: www.linak.com.br

Canada
LINAK Canada Inc.
Phone: +1 502 253 5595
Fax: +1 416 255 7720
E-mail: info@linak.ca
Web: www.linak-us.com

Czech Republic
LINAK C&S s.r.o.
Phone: +42 058 174 1814
Fax: +42 058 170 2452
E-mail: info@linak.cz
Web: www.linak.cz - www.linak.sk

Denmark - International
LINAK International
Phone: +45 73 15 15 15
E-mail: info@linak.com
Web: www.linak.com

Denmark - Sales
LINAK Danmark A/S
Phone: +45 86 80 36 11
Fax: +45 86 82 90 51
E-mail: linak@linak-silkeborg.dk
Web: www.linak.dk

Finland
LINAK OY
Phone: +358 10 841 8700
E-mail: linak@linak.fi
Web: www.linak.fi

France
LINAK France E.U.R.L
Phone: +33 (0) 2 41 36 34 34
Fax: +33 (0) 2 41 36 35 00
E-mail: linak@linak.fr
Web: www.linak.fr

Germany
LINAK GmbH
Phone: +49 6043 9655 0
Fax: +49 6043 9655 60
E-mail: info@linak.de
Web: www.linak.de

India
LINAK A/S India Liaison Office
Phone: +91 120 4531797
Fax: +91 120 4786428
E-mail: info@linak.in
Web: www.linak.in

Ireland
LINAK UK Limited (Ireland)
Phone: +44 (0)121 544 2211
Fax: +44 (0)121 544 2552
+44 (0)796 855 1606 (UK Mobile)
+35 387 634 6554 (Rep.of Ireland Mobile)
E-mail: sales@linak.co.uk
Web: www.linak.co.uk

Italy
LINAK ITALIA S.r.l.
Phone: +39 02 48 46 33 66
Fax: +39 02 48 46 82 52
E-mail: info@linak.it
Web: www.linak.it

Japan
LINAK K.K.
Phone: 81-45-533-0802
Fax: 81-45-533-0803
E-mail: linak@linak.jp
Web: www.linak.jp

Malaysia
LINAK Actuators Sdn. Bhd.
Phone: +60 4 210 6500
Fax: +60 4 226 8901
E-mail: info@linak-asia.com
Web: www.linak.my

Netherlands
LINAK Actuator-Systems B.V.
Phone: +31 76 5 42 44 40 /
+31 76 200 11 10
E-mail: info@linak.nl
Web: www.linak.nl

New Zealand
LINAK New Zealand Ltd
Phone: +64 9580 2071
Fax: +64 9580 2072
E-mail: nzsales@linak.com.au
Web: www.linak.com.au

Norway
LINAK Norge AS
Phone: +47 32 82 90 90
E-mail: info@linak.no
Web: www.linak.no

Poland
LINAK Polska
LINAK Danmark A/S (Spólka Akcyjna)
Phone: +48 22 295 09 70 /
+48 22 295 09 71
E-mail: info@linak.pl
Web: www.linak.pl

Republic of Korea
LINAK Korea Ltd.
Phone: +82 2 6231 1515
Fax: +82 2 6231 1516
E-mail: info@linak.kr
Web: www.linak.kr

Slovakia
LINAK Slovakia S.R.O.
Phone: +421 51 7563 444
Web: www.linak.sk

Spain
LINAK Actuadores, S.L.u
Phone: +34 93 588 27 77
Fax: +34 93 588 27 85
E-mail: esma@linak.es
Web: www.linak.es

Sweden
LINAK Scandinavia AB
Phone: +46 8 732 20 00
Fax: +46 8 732 20 50
E-mail: info@linak.se
Web: www.linak.se

Switzerland
LINAK AG
Phone: +41 43 388 31 88
E-mail: info@linak.ch
Web: www.linak.ch - www.fr.linak.ch
www.it.linak.ch

Taiwan
LINAK (Shenzhen) Actuator systems Ltd.
Taiwan Representative office
Phone: +886 2 272 90068
Fax: +886 2 272 90096
E-mail: sales@linak.com.tw
Web: www.linak.com.tw

Turkey
LINAK İth. İhr. San. ve Tic. A.Ş.
Phone: + 90 312 4726338
Fax: + 90 312 4726635
E-mail: info@linak.com.tr
Web: www.linak.com.tr

United Kingdom
LINAK UK Limited
Phone: +44 (0)121 544 2211
Fax: +44 (0)121 544 2552
E-mail: sales@linak.co.uk
Web: www.linak.co.uk

DISTRIBUTORS

Argentina
Novotec Argentina SRL
Phone: 011-4303-8989 / 8900
Fax: 011-4032-0184
E-mail: info@novotecargentina.com
Web: www.novotecargentina.com

Colombia
MEM Ltda
Phone: +[57] (1) 334-7666
Fax: +[57] (1) 282-1684
E-mail: servicioalcliente@memltda.com.co
Web: www.mem.net.co

India
Mechatronics Control Equipments India Pvt Ltd
Phone: +91-44-28558484, 85
E-mail: bala@mechatronicscontrol.com
Web: www.mechatronicscontrol.com

Indonesia
PT. Himalaya Everest Jaya
Phone: +6 221 544 8956 /+6 221 544 8965
Fax: +6 221 619 1925
Fax (Sales): +6 221 619 4658
E-mail: hejplastic-div@centrin.net.id
Web: www.hej.co.id

Israel
NetivTech LTD
Phone: +972 55-2266-535
Fax: +972 2-9900-560
Email: info@NetivTech.com
Web: www.netivtech.com

Singapore
Servo Dynamics Pte Ltd
Phone: +65 6844 0288
Fax: +65 6844 0070
E-mail: servodynamics@servo.com.sg

South Africa
Industrial Specialised Applications CC
Phone: +27 011 466 0346
E-mail: gartht@isagroup.co.za
Web: www.isaza.co.za

United Arab Emirates
Mechatronics
Phone: +971 4 267 4311
Fax: +971 4 267 4312
E-mail: mechtron@emirates.net.ae

Terms of use

LINAK® takes great care to provide accurate and up-to-date information about its products. However, it is the responsibility of the user to determine the suitability of LINAK products for any specific application. Due to ongoing product development, LINAK products are subject to continuous modifications and changes. LINAK reserves the right to make such modifications, updates, and changes without prior notice. For this reason, LINAK cannot guarantee the accuracy or current status of printed information about its products.

LINAK uses its best efforts to fulfil orders. However, for the reasons mentioned above, LINAK cannot guarantee availability of any particular product at any given time. LINAK reserves the right to discontinue the sale of any product displayed on its website or listed in its catalogues or in other written material created and produced by LINAK, LINAK subsidiaries, or LINAK affiliates.
All sales are subject to the applicable terms and conditions of sale and delivery available on LINAK websites.
LINAK and the LINAK logotype are registered trademarks of LINAK A/S. All rights reserved.

Copyright® LINAK • 2026-08 • LIT-63-02-002 V

WE IMPROVE YOUR LIFE