MEDLINE® IMPROVING EFFICIENCY CARELINE® IMPROVING EFFICIENCY

LIFT™
User Manual

LINAK® WE IMPROVE YOUR LIFE

Contents

Preface **4**
GENERAL ASSEMBLY INSTRUCTIONS **5**
DECLARATION OF INCORPORATION OF PARTLY COMPLETED MACHINERY **6**
Important information **7**
General warnings **8**
General recommendations **11**
General Regulatory Considerations **12**
General warranty periods **12**
Electromagnetic Compatibility (EMC) **13**
EMC Warnings 13
EMC responsibilities for LINAK actuator systems 14
Electrostatic discharge (ESD) 15
RF transmitter/receiver properties 16
FCC and IC Statements 16
Symbols **18**
Batteries **20**
General battery warnings 20
Lithium ion batteries 21
Lead acid batteries 24
System description **25**
Connecting the system **25**
General environmental conditions **26**
Information on start-up, deinstallation and operation **27**
Before installation, deinstallation or troubleshooting 27
Before start-up 27
During operation 27
Cleaning **28**
Cleaning warnings 28
IPX6 Washable 29
Rinsing aids 30
Cable wash 30
General maintenance **31**
Repair and disposal **32**
Troubleshooting **33**

CAL40 ..... **34**
BAL40 ..... **47**
CHL40 External Charger **50**
COL50 MK2 ..... **53**
BAL50 ..... **67**
CHL50 External Charger **70**
Contacts **74**

Preface

Dear User,

We are delighted that you have chosen a LINAK® product.

LINAK systems are high-tech products based on many years of experience in the manufacture and development of actuators, lifting columns, desk frames, electric control boxes, controls, batteries, accessories and chargers.

This User Manual does not address the end user. It is intended as a source of information for the equipment or system manufacturer only, and it will tell you how to install, use and maintain your LINAK product/system. The manufacturer of the end product has the responsibility to provide a User Manual where relevant safety information from this manual is passed on to the end user.

We are convinced that your LINAK system will give you many years of problem-free operation.

Before our products leave the factory they undergo full function and quality testing. Should you, nevertheless, experience problems with your product/system, you are always welcome to contact your local supplier.

LINAK subsidiaries and some distributors situated all over the world have authorised service centres, which are always ready to help you.

LINAK provides a warranty on all products (see warranty section).

This warranty, however, is subject to correct use in accordance with the specifications, maintenance being done correctly and any repairs being carried out at a service centre, which is authorised to repair LINAK products.

Changes in installation and use of LINAK systems can affect their operation and durability. The products are only to be opened by authorised personnel.

This User Manual has been written on the basis of the present technical knowledge. LINAK is constantly keeping the information updated and we therefore reserve the right to carry out technical modifications.

The introductory pages of this manual may contain information that is not applicable to the technical product pages and are to be seen as general information for all LINAK products.

LINAK A/S

GENERAL ASSEMBLY INSTRUCTIONS

Please read the following safety information carefully. Ensure that all staff who are to connect, mount, or use the actuator are in possession of the necessary information and that they have access to this assembly instruction.

Persons who do not have the necessary experience or knowledge of the product/products must not use the product/products. Besides, persons with reduced physical or mental abilities must not use the product/products, unless they are under surveillance or they have been thoroughly instructed in the use of the apparatus by a person who is responsible for the safety of these persons. Moreover, children must be under surveillance to ensure that they do not play with the product.

Warnings

Failure to comply with these instructions may result in accidents involving serious personal injury.

It is important for everyone who is to connect, install, or use the systems to have the necessary information and access to the User Manual on www.linak.com.

- If there is visible damage on the product it must not be installed.
- If the control box / Twindrive makes unusual noises or smells, switch off the mains voltage immediately.
- The products must only be used in an environment that corresponds to their IP protection.
- The cleaners and disinfectants must not be highly alkaline or acidic (pH value must be 6 to 8).
- Irrespective of the load, the duty cycle stated in the data sheets, must NOT be exceeded.
- The DESKLINE® systems can only be used in push applications.
- The control box / Twindrive must only be connected to the voltage stated on the label.
- System not specified for pull must only be used in push applications.
- Fastening screws and bolts must be tightened correctly.
- Do not open the closing device on the Twindrive during operation.
- Specifications on the label must under no circumstances be exceeded.
- NOT TO BE OPENED BY UNAUTORISED PERSONNEL.
- Use only the actuator within specified working limits.
- Note that during construction of applications, in which the actuator is to be fitted, there must be no risk of personal injury, such as squeezing of fingers or arms.
- If irregularities are observed, the actuator must be replaced.
- If the actuator is used for pull in an application where personal injury can occur, the following is valid: It is the application manufacturer's responsibility to incorporate a suitable safety arrangement, which will prevent personal injury from occurring, if the actuator should fail.
- MEDLINE® & CARELINE® products are rated to operate at an altitude < 2000 m.

Recommendations

Failure to follow these instructions can result in the actuator being damaged or being destroyed.

- Before you start mounting/dismounting, ensure that the following points are observed:
  - The actuator is not in operation.
  - The mains current supply is switched off and the plug has been pulled out.
  - The actuator is free from loads that could be released during this work.
- Before you put the actuator into operation, check the following:
  - The actuator is mounted correctly as indicated in the relevant user instructions.
  - The equipment can be freely moved over the actuator's whole working area.
  - The actuator is connected to a mains electricity supply/transformer with the correct voltage and which is dimensioned and adapted to the actuator in question.
  - Ensure that the voltage applied matches the voltage specified on the actuator label.
  - Ensure that the connection bolts can withstand the wear.
  - Ensure that the connection bolts are secured safely.
- During operation
  - Listen for unusual sounds and watch out for uneven running. Stop the actuator immediately if anything unusual is observed.
  - Do not side load the actuator.
  - Use only the actuator within the specified working limits.
  - Do not kick or step on the actuator.
- When the equipment is not in use
  - Switch off the mains supply or pull out the plug in order to prevent unintentional operation.
  - Check regularly the actuator and joints for extraordinary wear.
- Note: If the actuator is operated as a hand crank, it must be operated by hand, otherwise there is a risk of overloading the actuator and hereby damage the actuator.
  When changing the cables on a LINAK actuator, it is important that this is done carefully, in order to protect the plugs and pins.
  Please ensure that the plug is in the right location and fully pressed in before mounting the cable lid.

DECLARATION OF INCORPORATION OF PARTLY COMPLETED MACHINERY

LINAK A/S
Smedevænget 8
DK - 6430 Nordborg

LINAK A/S hereby declares that LINAK DESKLINE® products, characterised by the following models and types:

Control Boxes	CBD6S
Linear Actuators	DB5, DB6, DB14, LA23, LA31
Lifting Columns	DL1A, DL2, DL4S, DL5, DL6, DL8, DL9, DL10, DL11, DL12, DL14, DL15, DL16, DL17, DL18, DL19, DL20, DL21, BASE1, LC1
Desk Panels	DPA, DPB, DPH, DPF, DPG, DPT, DP1CS, DPI
Wireless Controls	BP10
Frames and Feet	Kick & Click, DF2, DF3, DF4, DF5, DLF
Accessories	BA001, BLE2LIN, CHUSB, DESK Sensor, SLS, SMPS, USB2LIN, WiFi2LIN, DC Connector, RFRL

LINAK A/S hereby declares that LINAK HOMELINE® products, characterised by the following models and types:

Control Boxes	CBD6DC
Linear Actuators	LA10, LA18, LA40 HOMELINE, BASE1
Dual Actuators	TD4, TD5
Controls	BP10, HC10, HC20, HC40, HC50, HC60
Accessories	BA002, CP, BLE2DC, BLE2LIN, LED Light Rail, MD1, SMPS, WiFi2LIN

LINAK A/S hereby declares that LINAK MEDLINE® & CARELINE® products, characterised by the following models and types:

Control Boxes	CA20, CA30, CA40, CA63, CAL40, CB6, CB6S, CB6P2, CB8, CB9, CBJ2, CBJ Care, CBJ Home, CO11, CO40, CO41, CO53, CO61, CO65, CO71, COL50, OPS, PJ2
Linear Actuators	KA19, KA30, KA30 ICA, LA20, LA23, LA24, LA24 ICA, LA27, LA28, LA29, LA30, LA31, LA34, LA40, LA42, LA44, LA54
Lifting Columns	BL1, LC1, LC3
Controls	ABL, ACC, ACK, ACO, ACOD, ACOM, ACL, DP, DPH, FS, FS3, FPP, HB30, HB70, HB80, HB100, HB190, HB200, HB400, HD80, HD600, HL70, HL400, SC01
Accessories	BA15, BA16, BA18, BA19, BA22, BAJ, BAJL, BAL40, BAL50, CH01, CHJ2, CHL40, CHL50, DJB, LIN2OB, MJB2, MJB5 Plus, Massage Motor, PJB4, QLCI2, SLS, SMPS10, UBL, UBL2, UBL4 Motion, USB-A Power Adapter

LINAK A/S hereby declares that LINAK TECHLINE® products, characterised by the following models and types:

Linear Actuators	LA12, LA14, LA21, LA23, LA25, LA30, LA33, LA35, LA36, LA37, LA73, LA76, LA77
Lifting Columns	LC3 IC
Accessories	FMB

comply with the following parts of the Machinery Directive 2006/42/EC, ANNEX I, Essential health and safety requirements relating to the design and construction of machinery: 1.5.1 Electricity supply

The relevant technical documentation is compiled in accordance with part B of Annex VII and this documentation or part hereof will be transmitted by post or electronically to a reasoned request by the national authorities.

This partly completed machinery must not be put into service until the final machinery into which it is to be incorporated has been declared in conformity with the provisions of the Machinery Directive 2006/42/EC where appropriate.

Nordborg, 2026-08-11

John Kling

LINAK A/S

John Kling, B.Sc.E.E., Certification and Regulatory Affairs
Authorised to compile the relevant technical documentation

Original declaration

Copyright© LINAK • 2026-10 • LIT-09-02-001 G

Important information

LINAK® products, within the scope of this manual, are not classified as medical electrical equipment or systems, nor do they fall within the scope of the EU Medical Device Directive/Regulation or other similar national regulations. The products are components to be built into a piece of medical electrical equipment by a manufacturer.

To support the assessment and certification task of the complete medical electrical equipment or system worldwide, LINAK provides certification, on a component level, according to the IEC 60601-1, (Medical electrical equipment – Part 1: General requirements for basic safety and essential performance) as recognised components by NRTL (Nationally Recognized Testing Laboratories).

Description of the various signs used in this manual:



Warnings

Failure to comply with these instructions may result in accidents involving serious personal injury.



Recommendations

Failing to follow these instructions can result in product damage.

Please read the following safety information carefully:

Ensure that all staff who are to connect, mount, or use the actuator system are in possession of the necessary information and that they have access to these assembly instructions.

Persons who do not have the necessary experience or knowledge of LINAK products should not use these. Moreover, persons with reduced physical or mental abilities must not use the products, unless they are under surveillance or they have been thoroughly instructed in the use of the equipment by a person who is responsible for the safety of these persons. Moreover, children must be under surveillance to ensure that they do not play with the product.

Please be aware that LINAK has taken precautions to ensure the safety of the actuator system. The manufacturer/OEM is responsible for the overall approval of the complete application.



LINAK recommends to use the actuators in push applications rather than pull applications.



LINAK actuators are not to be used for repeated dynamic push-to-pull movements.

For general pull applications or repeated dynamic push-to-pull movements in the application, please contact LINAK A/S if in doubt.

LINAK actuators and electronics generally fall outside the IEC 60601-1 definition of applied parts and are not marked as such.

However, assessing the risk whether actuators and electronics can unintentionally come into contact with the patient, determines that they are subject to the requirements for applied parts. All the relevant requirements and tests of the standard are carried out as part of the IEC CB* Scheme/NRTL** assessment.

* CB: Certification Body

**NRTL: Nationally Recognised Testing Laboratory

General warnings

Failure to comply with these instructions may result in accidents involving serious personal injury:

The medical device manufacturer is responsible for the incorporation of a suitable safety arrangement, if the actuator or lifting column is used for pull in an application where personal injury can occur, which will prevent personal injury from occurring in case of actuator failure.

Note that during construction of applications, in which the actuator is to be fitted, there must be no possibility of personal injury, for example the squeezing of fingers or arms.

The plastic parts in the system cannot tolerate cutting oil.

Assure free space for movement of the application in both directions to avoid a blockade.

The application and actuators are only to be operated by instructed personnel.

In applications with spline function, the blockage by an obstacle when the application is moving inwards, the removal of the obstacle will cause the load to drop until the spindle hits the nut.

Do not turn the outer tube.

Do not use chemicals.

Inspect the actuator system regularly for damage and wear.

Do not expose LINAK actuator system components to high intensity ultraviolet radiation disinfection lamps. This may damage the enclosure, supporting parts and cables.

LINAK actuators and electronics are not designed for use within the following fields:

- In the presence of a flammable anesthetic mixture with air or with oxygen or nitrous oxide
- Planes and other aircrafts
- Explosive environments
- Nuclear power generation

If faults are observed, the products must be replaced.

A LINAK control box, actuator and accessory component must, in the final application, be placed where it is not exposed to any impact. This is to prevent damage if a passer-by accidentally hits it with an object or when cleaning the floor with a broom or a mop. On a medical bed e.g. this might be underneath the mattress support platform. If necessary to mitigate this risk, additional protection might be required.

To avoid unintended movement, prevent foreign objects or persons from unintentionally activating a footswitch or a hand control at any time, for instance during normal use or maintenance.

If there is visible damage on the product it should not be installed.

If the actuator system makes unusual noise or smells, switch off the mains voltage immediately and disconnect batteries, if applicable.

The products must only be used in an environment that corresponds to their IP protection class.

The cleaners and disinfectants must not be highly alkaline or acidic (pH value 6-8). See cleaning section.

Irrespectively of the load, the duty cycle stated on the product label must NOT be exceeded.

The control box must only be connected to the voltage stated on the label.

Systems not specified for pull must only be used in push applications.

Fastening screws and bolts must be tightened correctly.

Specifications on the product label must under no circumstances be exceeded.

NOT TO BE OPENED BY UNAUTHORISED PERSONS.

Only use the actuator within specified working limits.

Be aware that during the design of medical devices, the risk of personal injury (for instance squeezing of fingers or arms) must be minimised.

If irregularities are observed, the actuator must be replaced.

All cables must be mounted in such a way that they are not trapped or exposed to tension or sharp objects when the application is moved in different directions.

General recommendations

Failing to follow these instructions may result in actuator system damage:

The duty cycle printed on the actuator system label must always be respected. If exceeded, there is a risk that the actuator system is damaged. Unless otherwise specified on the label, the duty cycle is max. 10%, max. 2 min. in use followed by 18 min. not in use.

All detachable connections between components must be locked by the cable locking mechanism - when applicable.

It is recommended to have options like quick release, manual lowering or similar built into the system in case of power loss or system failure or if movement of the system is critical. After service it is recommended to test the system for correct functionality before it is put back into operation.

Prior to assembly/disassembly, ensure that the following points are observed:

- The actuator system is not in operation.
- The mains current supply is switched off and the plug has been pulled out.
- Batteries - if applicable - may also power the system.
- Actuators are free from loads that could be released during this work.

Prior to operating the actuator system, check the following:

- Actuator system components are correctly mounted as indicated in the product-specific user instructions.
- The equipment can be operated in its entire intended range of movement.
- Ensure that the load-supporting bolts can withstand the wear.
- Ensure that the load-supporting bolts are secured safely.

During operation:

- Listen for unusual sounds and watch out for uneven movement. Stop the actuator system immediately if anything unusual is observed.
- Do not sideload the actuator.
- Do not step on or kick any LINAK component.

When the equipment is not in use:

- Switch off the mains supply or pull out the plug in order to prevent unintentional operation.

Cables and plugs:

- It is important to remove the transport plastic bag before using the cable.
- When changing the cables on a LINAK® actuator system, it is important that this is done carefully in order to protect the plugs and pins.
- Please ensure that the plug is in the right location and properly inserted before the cable lid is mounted.

General Regulatory Considerations

Certain LINAK components are not individually certified under IEC 60601-1 due to incomplete constructional features that prevent full compliance. Specifically, products without enclosures, such as for instance those exposing printed circuit boards or mechanical parts, do not meet the safety requirements outlined in the standard.

Medical equipment must comply with strict regulations to ensure the safety of patients and healthcare professionals.

When LINAK components are integrated into a medical device, it is the responsibility of the medical device manufacturer to ensure that these components are adequately enclosed.

Ultimately, the medical device manufacturer is responsible for ensuring that the final product complies fully with IEC 60601-1 and all other applicable standards.

General warranty periods

As general warranty period, LINAK provides 5 years (60 months) warranty on MEDLINE and CARELINE products used in beds and medical applications. If MEDLINE and CARELINE products are used in other applications, they will be covered by 1½ years (18 months) warranty.

Batteries are covered by a specific product warranty of 12 months.

External products that are not manufactured by LINAK A/S: 12 months are added to the warranty period, for instance for transportation and stocking. Relabelling of these products only takes place, if the production date exceeds one year from the date of dispatch to the customer.

If there is any doubt whether returned products are covered by the warranty, they are covered by the warranty. Please use the date of the control box or actuator as reference, if possible.

Electromagnetic Compatibility (EMC)

EMC Warnings

Electromagnetic compatibility – general

LINAK® actuator systems bear the CE marking as an attestation of compliance with the EMC Directive 2014/30/EU. The systems are designed to meet all requirements of applicable standards and have been tested to meet IEC 60601-1-2 requirements.

Emission:

LINAK Actuator Systems are CISPR 11, Group 1, Class B products, comply with IEC 61000-3-2, Class A and IEC 61000-3-3.

Immunity:

Test levels are according to Professional Healthcare Facility and Home Healthcare Facility Environment.

Electromagnetic phenomena are evaluated on a system level, with the actuator connected to a LINAK control box and accessories.

LINAK always recommends to perform verification tests on the final medical device.

Electromagnetic compatibility – third party components

Use of accessories, transducers and cables other than those specified by LINAK could result in increased electromagnetic emissions or decreased electromagnetic immunity of the actuator system and result in improper operation.

Electromagnetic compatibility – interference with other equipment in general

Use of the actuator system adjacent to or stacked with other equipment should be avoided as this could result in improper operation. If such use is necessary, the actuator system and the other equipment should be observed to verify that they are operating properly.

If the user notes unusual behavior of the actuator system, in particular if such behaviour is intermittent and associated with the standing right next to mobile phones, microwaves and radio broadcast masts, this could be an indication of electromagnetic interference.

If such behaviour occurs, try to move the actuator system further away from the interfering equipment.

Electromagnetic compatibility – interference with other equipment, RF communications

RF communication equipment (e.g. RFID, wireless RF etc. including peripherals such as antenna cables and external antennas) should be used at a distance no closer than 30 cm (12 inches) to any part of the actuator system. This also applies to cables specified by the manufacturer. Otherwise, a performance degradation of this equipment could result.

EMC responsibilities for LINAK actuator systems

LINAK verifies the EMC performance of each LINAK product and approves them individually. The LINAK products can be combined and integrated into many different systems. LINAK also verifies the system EMC performance on commonly used combinations.

LINAK has certificates in accordance with applicable standards for each product and provides the customers, who are building the application and integrating these products into systems (systems with control box, actuators, cables, batteries, etc.), with these certificates.

However, EMC testing of LINAK products in generic LINAK systems is not made in an environment that corresponds to the specific application environment which differs from the generic testing environment. There will be differences that can affect the EMC performance in the specific target application.

The customer is responsible for qualifying and approving the complete application including the LINAK system.

Regulatory standard

LINAK products, being components to be incorporated by a Manufacturer [definition: IEC 60601-1 ed.3.1, cl. 3.55] into Medical Electrical Equipment [definition: IEC 60601-1 ed.3.1, cl. 3.63], are tested concerning the EMC phenomena according to the Collateral Standard IEC 60601-1-2 ed. 4.1.

IEC 60601-1-2 ed. 4.1 sets forth the requirements for the electromagnetic compatibility of Medical Electrical Equipment, ensuring that devices operate safely and effectively within their intended environments. Compliance with this standard is essential to minimize electromagnetic interference and maintain the integrity and performance of Medical Devices.

Furthermore, IEC 60601- 1-2 ed. 4.1 states:

"This collateral standard recognizes that the Manufacturer has the responsibility to design and perform Verification of Medical Electrical Equipment and Medical Electrical Systems to meet the requirements of this Collateral Standard and to disclose information to the Responsible Organization or Operator so that the Medical Electrical System will remain safe throughout its Expected Service Life."

Qualification process of a new application

The qualification process for a new application is normally done in cooperation between the customer and LINAK. LINAK provides the relevant support, competence and documentation needed for the customer's overall development plan and test plan for the specific application.

The driver of the qualification process is the customer who has the ultimate application responsibility (MDS). The customer identifies and specifies the needed testing based on many different parameters (experience, risk management, requirements from standards, etc.).

In many cases, the customer is establishing and verifying tests early in the project to ensure that the approval process has a low risk of failing when tested in the approval institute.

The customer identifies which tests to make and when they are to be performed in the project to mitigate the risk of failure in the approval process which also includes EMC testing.

Electrostatic discharge (ESD)

LINAK® considers ESD to be an important issue and years of experience have shown that equipment designed to meet the levels specified in standards might be insufficient to protect electronic equipment in certain enviroments.

1. Handling and mounting electrostatic discharge sensitive devices (ESDS devices).

- Handling of sensitive components shall only take place in an ESD Protected Area (EPA) under protected and controlled conditions.
- Wrist straps and/or conductive footwear (personal grounding) shall always be used when handling ESDS devices.
- Sensitive devices shall be protected outside the EPA by the use of ESD protective packaging.

2. Responsibility LINAK/customer

- ESDS devices must under no circumstances, during transport, storage, handling, production or mounting in an application, be exposed to harmfull ESD.
- LINAK can only guarantee the lifetime of ESDS devices if they are handled in the same way from production at LINAK A/S until they are mounted in the manufacturer's application. It is therefore important that the ESDS devices are not removed from the ESD protected packaging before they are physically within the EPA area at the customer premises.

Please refer to EN61340 for further information:

EN61340-5-1, Electrostatics - Protection of electronic devices from electrostatic phenomena - General requirements

EN61340-5-2, Electrostatics - Protection of electronic devices from electrostatic phenomena - User guide

RF transmitter/receiver properties

Some LINAK products emit RF-power by intention for communication purposes.

Frequency band of transmission: 2402 MHz - 2480 MHz

Type: Bluetooth® Low Energy

Modulation: GFSK

Maximum Effective Radiated Power (ERP): 10 dBm

FCC and IC Statements

For RF-emitting products (e.g. Bluetooth®, Wi-Fi) intended to be used on the North American continent, the following applies:

FCC statement

NOTE: This equipment has been tested and found to comply with the limits for a Class B digital device, pursuant to part 15 of the FCC Rules. These limits are designed to provide reasonable protection against harmful interference in a residential installation. This equipment generates uses and can radiate radio frequency energy and, if not installed and used in accordance with the instructions, may cause harmful interference to radio communications. However, there is no guarantee that interference will not occur in a particular installation. If this equipment does cause harmful interference to radio or television reception, which can be determined by turning the equipment off and on, the user is encouraged to try to correct the interference by one or more of the following measures:

- Reorient or relocate the receiving antenna.
- Increase the separation between the equipment and receiver.
- Connect the equipment into an outlet on a circuit different from that to which the receiver is connected.
- Consult the dealer or an experienced radio/TV technician for help

Changes or modifications not expressly approved by the party responsible for compliance could void the user's authority to operate the equipment.

This device complies with Part 15 of the FCC Rules. Operation is subject to the following two conditions:

(1) this device may not cause harmful interference, and

(2) this device must accept any interference received, including interference that may cause undesired operation.

FCC RF Exposure Warning Statement:

This equipment complies with FCC radiation exposure limits set forth for an uncontrolled environment. This equipment shall be installed and operated with a minimum distance of 20 cm between the radiator and body.

IC statement

This device contains licence-exempt transmitter(s)/receiver(s) that comply with Innovation, Science and Economic Development Canada's licence-exempt RSS(s). Operation is subject to the following two conditions:

(1) This device may not cause interference.

(2) This device must accept any interference, including interference that may cause undesired operation of the device.

ISED Radio Frequency Exposure Statement:

This equipment complies with ISED exposure limits set forth for an uncontrolled environment. This equipment shall be installed and operated with a minimum distance of 20 cm between the radiator and body.

L'émetteur/récepteur exempt de licence contenu dans le présent appareil est conforme aux CNR d'Innovation, Sciences et Développement économique Canada applicables aux appareils radio exempts de licence. L'exploitation est autorisée aux deux conditions suivantes :

(1) L' appareil ne doit pas produire de brouillage;

(2) L' appareil doit accepter tout brouillage radioélectrique subi, même si le brouillage est susceptible d' en compromettre le fonctionnement.

Déclaration d'ISDE sur l'exposition aux radiofréquences:

Cet équipement est conforme aux limites d'exposition d'ISDE établies pour un environnement non contrôlé. Cet équipement doit être installé et utilisé à une distance minimale de 20 cm entre le radiateur et le corps.

Symbols

The following symbols are used on the LINAK product labels, where applicable:

	IEC 60417-5172: Class II equipment		Compliance to all relevant EC directives
	IEC 60417-5840: Applied part type B		UK Conformity Assessment
	IEC 60417-5019: Class I equipment Protective earth; protective ground		Regulatory compliance mark: The Australian Safety/EMC Regulations
	IEC 60417-5002: Positioning of cell		Alternating current
	ISO 7000-0434A: Caution, consult accompanying document		Direct current
	ISO 7000-1641 Operating instructions		Reduced ETL recognised component mark for Canada and the United States. X: The mark is always accompanied by a control number of 6 or 7 figures. For complete description, see ETL marking on next page.
	Electronics scrap		
	Electronics scrap		Bluetooth®
	Recycle		Japanese TELEC
	Recognised Component mark for Canada and the United States		
	PSE diamond mark		
	PSE circle mark		

Electrical Testing Laboratories (ETL) marking

Due to space limitations, the complete ETL marking demands are not represented on the marking plates.

The full ETL recognised component markings are shown here:

C/N 120690
Conforms to ANSI/AAMI Std. ES60601-1
Cert. to CSA Std. C22.2 No. 60601-1

C/N 4008004
Conforms to ANSI/AAMI Std. ES60601-1
Cert. to CSA Std. C22.2 No. 60601-1

C/N 4008838
Conforms to ANSI/AAMI Std. ES60601-1
Cert. to CSA Std. C22.2 No. 60601-1

C/N 9901916
Conforms to ANSI/AAMI Std. ES60601-1
Cert. to CSA Std. C22.2 No. 60601-1

C/N 4008005
Conforms to ANSI/AAMI Std. ES60601-1
Cert. to CSA Std. C22.2 No. 60601-1

C/N 4008671
Conforms to ANSI/AAMI Std. ES60601-1
Cert. to CSA Std. C22.2 No. 60601-1

C/N 4008003
Conforms to ANSI/AAMI Std. ES60601-1
Cert. to CSA Std. C22.2 No. 60601-1

C/N 4008623
Conforms to ANSI/AAMI Std. ES60601-1
Cert. to CSA Std. C22.2 No. 60601-1

C/N 4009507
Conforms to ANSI/AAMI Std. ES60601-1
Cert. to CSA Std. C22.2 No. 60601-1

Batteries

To comply with the EU Battery Regulation (EU) 2023/1542, battery-related information is provided through this QR code.

Scanning the QR code gives access to battery identification details, as well as safety and environmental information available on the LINAK website.

This information must also be included in the end-product user manual.

General battery warnings

Handle batteries carefully. Do not short circuit the battery.

Avoid continuous battery discharge when the medical device is not in use, as this may cause lead sulphate formation, which, if left in this state for too long, will irreversibly damage the battery.

LINAK battery packs may emit flammable gases. Do not expose the battery packs to fire or equipment that emits sparks. Moreover, do not store the battery in a closed environment or incorporate it into a closed structure of an enclosure as this may cause an explosion, fire, equipment damage, or injury.

Handle tools carefully and do not wear jewelery when handling batteries. A short-circuit of the battery terminals can cause burn injuries, damage or trigger explosions.

Only connect LINAK batteries to compatible chargers.

LINAK battery packs contain toxic substances. If the internal battery fluid leaks out and gets onto skin or clothing, make sure it is washed off with clean water. Moreover, if the fluid gets into the eyes, rinse them immediately with clean water and seek medical assistance.

Do not use or store LINAK battery packs in places where the ambient temperature exceeds 50 °C, such as inside a hot automobile, in direct sunlight, or in front of a stove or a source of intense heat. Doing so can shorten the battery life, lower its performance level, cause the battery to leak fluid, explode, cause fire, or be damaged.

Applications where batteries serve as backup and not as the main power source should always be connected to mains whenever possible.

Lithium ion batteries

Li-Ion batteries are moving in the direction of minimising the physical size and, at the same time, increasing the capacity. This gives a very compact battery with a high energy concentration. It also increases the risk of thermal runaway (see note below) due to internal short circuits.

The general use of Li-Ion batteries has increased, and the inherent risk of thermal runaway has led to stricter rules within the transport industry, specifically air transport with tightened restrictions on the quantity, handling, and storage of specific products.

The OEMs and consumers must recognise that although safe to use, Li-Ion cells always have a very small risk of thermal runaway. The risk could be as little as 1 PPM or even less.

LINAK currently bases our Li-Ion battery design on cell types with an industry-proven history (e.g. electric cars). The use of well-proven cell technology reduces the risk of thermal runaway, but it does not eliminate it. LINAK has completed activities to reduce this risk and the complete battery package is approved in accordance with UL.

An external, internationally recognised expert has also reviewed the design to ensure that it is manufactured according to the latest recommendations. Further to that, we only use cells from well-recognised manufacturers.

LINAK recommends that when using Li-Ion batteries, the customers should carry out proper risk analysis on their application. The risk analysis must also take into consideration that these products are not mounted in positions where they are in direct contact with flammable materials.

LINAK Li-Ion batteries have no greater risk of thermal runaway than other Li-Ion cells from well-recognised manufacturers within the market. Therefore, LINAK cannot take responsibility for any failures that occur due to a failure that is inherent in the nature of Li-Ion batteries.

If any of the Li-Ion batteries built into LINAK products are found to be defective under warranty, LINAK will provide the OEM with a new product. LINAK explicitly disclaims all other remedies. LINAK shall not in any event be liable under any circumstances for any special indirect punitive incidental or consequential damages or losses arising from any incident related to the inherent risk of thermal runaway in the Li-Ion cell and any use of LINAK products. Moreover, LINAK explicitly disclaims any responsibility for profit loss, failure to realise expected savings, any claim against our customer by a third party, or any other commercial or economic losses of any kind, even if LINAK has been advised of the possibility of such damages or losses.

Note: ‘Thermal runaway’ is overheating of a cell, and it could lead to a small fire and smoke from the cell.

Transportation

The lithium ion batteries must be packed and transported in accordance with applicable regulations. Always ask your local transportation provider how to handle the transportation of lithium ion batteries.

Please see the general assembly instructions and the mounting section for detailed information.

Warnings

When using Li-Ion batteries with patient lift control boxes, loss of power might happen due to the battery deep discharge protection. This will only happen in case of continuous battery use despite warnings. In this event, there may be no warning, and the application may not be able to move when expected.

In his risk analysis, the customer must take into consideration how to assure alternative means to make movement, for instance quick release or manual lowering.

Do not open the battery housing as damaging the cell or circuitry may develop excessive heat.

If product caution is not clearly visible at low light intensity, read the product label instructions symbol. A warning must be included in the application manufacturer manual for the medical device.

The application manufacturer must test the application and ensure that intentional and unintended operations do not exceed the battery specification limits.

Defective or damaged Li-Ion batteries are not allowed for transportation.

For safety reasons, please adhere to the indicated charging and operation temperature.

In case the battery is too hot, disconnect it, evacuate the room, and wait for 2 hours before taking further steps.

Mounting instructions must be followed in order to avoid exposing batteries to water.

In general, recharging of batteries must take place every 12 months. However, please note:

- New Li-Ion batteries, shipped from LINAK are in a deep-sleep state, where the self-discharge is very little
- When mounted in an application, LINAK Li-Ion batteries wake up, resulting in a higher rate of charge, depending on the application/system
- Application manufacturer must consider this idle consumption for his specific system and make precautions to avoid discharged batteries.
- Contact your LINAK sales team for further information

If batteries are to be shipped by air, they shall not be charged to more than 30%

Disposal of the battery takes place in accordance with local regulations.

Recommendations

- Do not exceed the storage temperature as it will shorten the product life and performance.
- Allow the battery to settle to room temperature before use.
- Lithium ion batteries are not intended for use in outdoor applications and indoor pool environments.
- If the battery is completely discharged, then recharge the battery before storage.
- Always use correct LINAK charger

DO NOT:

- Heat or burn the batteries.
- Expose the batteries to high impact/excessive force.
- Crush or puncture the batteries.
- Use batteries with signs of damage or corrosion.
- Charge or store the batteries near combustible material.
- Exceed IP-ratings.
- Overcharge or fully discharge the batteries.

Safety feature

Lithium ion batteries contain several mechanisms to protect themselves from being damaged due to excessive use. In case of overheating, the device will activate a thermal protection. No power output will be available until the temperature is again within normal operating range.

Overheating may occur by extensive use at high temperatures or when exceeding the duty cycle (see product label).

Lead acid batteries

Maintenance of batteries

Prior to first use of LINAK® batteries, please make sure that they are charged at least 24 hours and if possible even longer for proper functioning and prolonging the battery lifetime.

Replacement of batteries

The batteries must only be replaced by the same type of batteries or mechanical and electrical equivalent types. The batteries must be new or maintained by means of charging at least every 6 months. The batteries, which make a set, must be supplied with identical production codes.

Production code mismatch may lead to a severely reduced lifetime expectancy.

Before mounting, ensure that the battery set is correctly connected, compare with the drawing in the battery room and check that no connectors are loose.

Warnings in connection with battery replacement

Please observe the following maintenance, replacement, and disposal requirements to ensure a safe and reliable operation.

The batteries are to be replaced after 4 years at the latest. Perhaps earlier, depending on the pattern of use. Frequent and high-powered discharges reduce the battery life. For an optimum lifetime, the product must be connected to the mains voltage as often as possible. It is recommended that the batteries are to be charged for at least every 6 months - otherwise the batteries will have reduced capacity due to self-discharge. It is recommended to test the battery function at least once every year.

The battery compartment is hermetically separated from the electronics compartment. When replacing the batteries this separation must not be damaged or modified as this may allow penetration of battery gas into the electronics compartment with risk of explosion.

When replacing batteries in waterproof products (IPX5 and IPX6), precautions must be taken that the sealing material (silicone ring or joint filler) is not damaged and that it is correctly placed in the groove. Hereafter, the screws in the cover are to be fastened with approx. 1 Nm.
If necessary, replacement sealing is available at LINAK.

The battery compartment is supplied with ventilation that ensures correct and necessary airing of the battery compartment. This airing must not be blocked or covered as a positive pressure may occur with risk of explosion.

If the product has been exposed to mechanical overload (lost on the floor, collision/squeezing in the application or a powerful stroke), the product must be sent to an authorised workshop for control of the hermetic separation between the battery and electronics compartment.

Disposal

Lead acid batteries must be disposed of in the same way as car batteries. Alternatively, they may be returned to LINAK.

System description

LINAK® actuators, lifting columns and electronics have been developed for use in all places where a linear movement is required.

LINAK products can for example be used for:

- Adjustment of beds
- Patient lifts within the care and hospital sector
- Adjustment of dentist chairs/gynaecological chairs

Connecting the system

Do not connect the battery until all actuators and hand control have been connected to the LIFT system.

Start by connecting the hand control to the control box. The connection in the control box is marked with "HB".

Connect the different actuators to the different channels on the control box. Each channel is marked with a number (e.g. "1", "2", "3".....).

Check that all plugs are well connected and firmly pushed into the connector. Due to the fact that LINAK® control boxes are designed for a high IP degree, a firm force can be required.

Connect the battery.

The actuators can now be operated by pressing a button on the hand control.

LINAK LIFT system

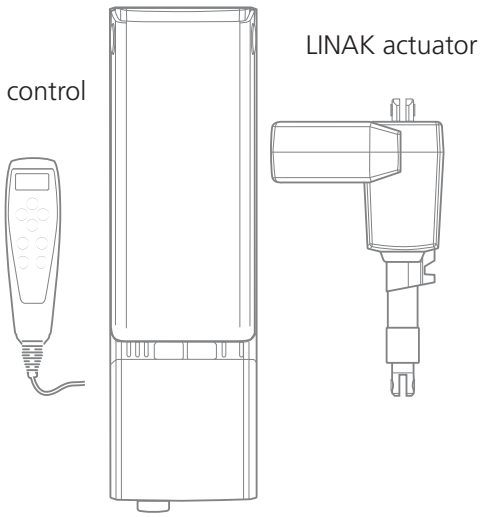

LINAK control box and battery

To disconnect the system, press the emergency button.

Charging is only allowed in dry environment, and the appliance inlet must be thoroughly dried before connecting to mains.

General environmental conditions

Operating, storage and transport	
Operating temperature	+5 °C to +40 °C
Relative humidity	20% to 80% - non-condensing
Atmospheric pressure	700 to 1060 hPa (Rated to be operated at an altitude ≤ 3000 m)
Storage temperature	-10 °C to +50 °C
Relative humidity	20% to 80% - non-condensing
Atmospheric pressure	700 to 1060 hPa (Rated to be stored at an altitude ≤ 3000 m)
Transport temperature	-10 °C to +50 °C
Relative humidity	20% to 80% - non-condensing
Atmospheric pressure	700 to 1060 hPa (Rated to be transported at an altitude ≤ 3000 m)
These values apply unless specified otherwise in the product-related texts.	

Information on start-up, deinstallation and operation

Before installation, deinstallation or troubleshooting

- Stop the actuator/lifting column.
- Switch off the power supply or pull out the mains plug and pull out the plug to the actuator/lifting column.
- Relieve the actuator/lifting column of any loads, which may be released during the work.

Before start-up

- Make sure that the system has been installed as instructed in the relevant product manual.
- The individual parts (actuator/lifting column/hand controls etc.) must be connected before the control box is connected to the mains.
- Make sure that the mains voltage to be connected to the product or the system is the one stated on the label.
- The equipment can be moved freely over the whole working area of the actuator/lifting column.
- Check correct function after mounting.
- The actuator/lifting column must not be loaded in excess of the values indicated in the specifications on the product label.
- The duty cycle noted on the product label must always be observed. Otherwise there is a risk of product damage. Exceeding the duty cycle will result in a dramatic reduction of the system lifetime.
- Unless specified otherwise on the product label, the duty cycle is max. 10%, max. 2 minutes in use followed by 18 minutes not in use.
- The actuator/lifting column system may only be used in an environment corresponding to the IP rating of the system. LINAK products are marked with the actual IP rating on the label.
- If the actuator is assembled in the application and is exposed to push or pull during transportation, the actuator can be damaged.
- If any individual parts are suspected to be damaged, do not install the parts, but return them for inspection/service.

During operation

- Check for unusual sounds and irregular movement. Stop the actuator/lifting column immediately if anything unusual is observed.
- If the control box makes unusual noises or smells, switch off the mains voltage immediately and the external battery, if any.
- Take care that the cables are not damaged.
- Unplug the mains cable on mobile equipment before it is moved.

Cleaning

The products can be cleaned as described in the following according to their IP protection stated on the product label.

The IP code specifies the protection degree provided by the enclosures. For most products, only the protection against ingress of water (second characteristic numeral) is specified, ingress of solid foreign objects or dust (first characteristic numeral) is not specified and therefore replaced by the letter X in the code. However, it should be noted that compliance with the requirements of IEC 60601-1 automatically allows to rate the medical equipment as IP2X because the requirements of IEC 60529 for this rating are the same as the accessibility requirements.

IP protection	Cleaning instructions
IPX0	Clean with a damp cloth
IPX1	Clean with a damp cloth
IPX2	Clean with a damp cloth
IPX3	Clean with a damp cloth
IPX4	Clean with a damp cloth
IPX5	Wash with a brush and water, but not water under pressure
IPX6	Wash with a brush and water. The water can be under pressure, but the system must not be cleaned directly with a high pressure cleaner. Max. 20 °C
IPX6 Washable according to IEC 60601-2-52	Clean by the use of wash tunnels according to IEC 60601-2-52
IPX6 Washable DURA™	Clean by the use of wash tunnels according to IEC 60601-2-52, extended washing cycle test

To avoid degreasing of the piston rod, the actuator should be retracted to minimum stroke and without load before washing.

Cleaning warnings

The systems must not be sprayed directly with a high pressure cleaner.

Interconnecting cables must remain plugged in during cleaning to prevent water ingress.

Cleaning with a steam cleaner is not permitted

UV cleaning is not permitted.

IPX6 Washable

LINAK® washable products frequently undergo a fully regulated washing test.

At LINAK, 'IPX6 Washable' means that the products conform only to this test.

Standard washing procedure

Reference: The standard IEC 60601-2-52 newest revision, which includes special demands to fundamental safety and relevant functional characteristics for hospital beds.
The demands for the washing process are described in the German "Maschinelle Dekontamination" from the organisation AK-BWA (Arbeitskreis Bettgestell- und Wagen-Dekotaminationsanlagen).

Description: At LINAK, the washing test takes place in an instrument washing machine, which is fitted and programmed in such a way that it duplicates the process used in a typical hospital installation for the cleaning of beds and other medical equipment.
During the test, the products are exposed to both thermal and chemical effects.
To avoid degreasing of the piston rod, the actuator should be retracted to minimum stroke and without load before washing.

Preparation: As plastic materials to a larger or lesser degree change characteristics and shape with time and climatical exposure, an ageing of the products is carried out first. The conditions for ageing are 65 °C +/- 2 °C in normal dry air for 10 days followed by a minimum of 16 hours at room temperature before the washing process starts.

Water: Degree of hardness, no more than 5° dH and no demineralised water.

Detergents: **LINAK recommends the following products:**

Sekumatic FDR or FRE from Ecolab

Neodisher Dekonta from Dr. Weigert

Thermosept NDR from Schülke or similar with a pH-value of 5 - 8 and in a concentration of 0.5 %

Rinsing aids

LINAK® recommends the following products:

- Sekumatic FKN from Ecolab
- Neodisher BP or TN from Dr. Weigert
- Thermosept BSK from Schülke or similar with a pH-value of 5 - 8 and in a concentration of 0.2 %.

Demands to chemicals:

- They must not contain caustic solutions
- They must not change the surface structure or adhesive properties of the plastic
- Must not break down grease

LINAK washing profile according to IEC 60601-2-52

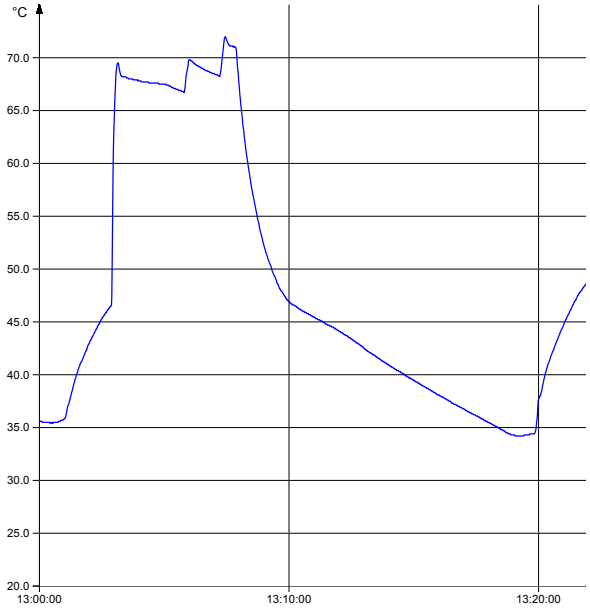

LINAK washing machine



Cable wash

Before the washing procedure starts

In order to maintain the flexibility of the cables, it is important that the cable is placed in such a way that the cable's own weight does not strain the coil during the washing process. This can be done by placing the cable ON the bed or another form of support for the cable. Please see the examples in the picture to the right.

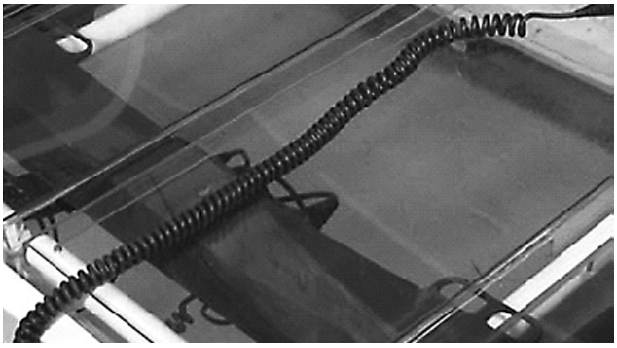

General maintenance

If not otherwise stated in the specific product section.

- LINAK products must be cleaned at regular intervals
- Frequent inspection for malfunction, mechanical damage, wear and cracks. Worn-out parts must be replaced
- Inspection/maintenance intervals are to be recommended by the medical device manufacturer
- LINAK products are closed units and require no internal maintenance
- LINAK products must be IPX6 Washable and IPX6 Washable DURA when cleaning in wash tunnels
- O-rings: When individual parts are replaced in a LINAK IPX6, IPX6 Washable or IPX6 Washable DURA system, the O-rings must be replaced at the same time on all parts. On all products where replaceable cables or fuses have been dismounted or replaced, the O-ring must be replaced, and the O-rings and the receptacle insert must be greased with an acid-free Vaseline.

Repair and disposal

Only an authorised LINAK® service centre should repair the LINAK actuator systems. Systems to be repaired under warranty must be sent to an authorised LINAK service centre.

In order to avoid the risk of malfunction, all actuator repairs must only be carried out by an authorised LINAK Service shop or repairers, as special tools and parts must be used.

If a system is opened by unauthorised personel there is a risk that it may malfunction at a later date.

LINAK systems or components may be disposed of, possibly by dividing them into different waste groups for recycling or combustion.

We recommend that our product is disassembled as much as possible at the disposal and that you try to recycle it. LINAK systems or components should be disposed of in accordance with the environmental regulations applicable in the respective country.

Troubleshooting

Symptom	Possible cause	Action
No motor sound or movement of piston rod	- The actuator is not connnected to the control box - Blown fuse in the control box - Cable damaged	- Connect the actuator to the control box - Fuse must be changed - Send actuator for repair
Excessive electricity consumption		- Send actuator for repair
Motor runs but spindle does not move	- Gear wheel or spindle damaged	- Send actuator for repair
Actuator cannot lift full load	- Clutch is worn - Motor is damaged	- Send actuator for repair
Motor sound but no movement of piston rod		- Send actuator for repair
No signal from Reed or Hall switch		- Send actuator for repair
Motor runs and quick release does not function or is noisy	- Declutching arm turns less than approx. 75 °C	- Adjust cable
Piston rod will only move inwards and not outwards	- Safety nut has operated	- Send actuator for repair
	- Not connected to mains	- Connect to mains
Power indicator does not light up	- The fuse has blown	- Replace fuse, if the system is prepared for external fuse replacement, or send the system for repair
	- Defective power cable	- On control boxes with exchangeable power cable, change the cable. - On control boxes with fixed cable, send it for repair
	- Control box defective	- Send control box for repair
	- Actuator plug not pushed into control box properly	- Push actuator plug properly into control box
Power indicator lights up, but actuator does not run	- Actuator defective	- Replace actuator - Defective control box - Replace the control box
Control box relays are clicking	- Control box defective	- Send control box for repair
Power indicator lights up, but actuator does not run	- Hand control defective	- Send hand control for repair
No relay noise is heard from control box Not valid for CB20/CB6S OBF/CB16 OBF	- Battery completely flat	- Charge battery
Control box completely dead on battery and no relay clicking	- Battery defective	- Replace battery
	- Actuator plug not properly pushed into control box	- Push actuator plug properly into control box
Actuator does not run on battery, but relay clicking can be heard	- Actuator defective	- Replace actuator
	- Control box defective	- Replace control box
	- Hand control defective	- Send hand control for repair
	- Control box defective	- Send control box for repair
Control box okay apart from one direction on one channel		

CAL40



The control box CAL40 is part of the LIFT40 product series specially developed for patient lifts.

LIFT40 is a complete system consisting of the control box CAL40 or CAL40+, a battery BAL40 and an external charger CHL40 in a flexible solution. Combined with one or more actuators and a hand control you have a complete system for modern patient lifts.

Usage

With internal charger

Nominal current draw max. 350 mA (depending on input voltage)

Standby power of 230 VAC = 0.7 W (depending on input voltage)

Input voltage range: 120-240 VAC (50/60 Hz)

Power consumption (charging): max. 30 W
(depending on input voltage)

Duty cycle:	Max. 10%, 2 minutes continuous use followed by 18 minutes without use
Operating temperature:	+5 °C to +40 °C
Storage temperature:	-10 °C to +50 °C
Relative humidity:	20% to 80% - non-condensing
Atmospheric pressure:	700 to 1060 hPa
Meters above sea level:	Max. 3000 meters

Mains supply grid should be limited to the highest prospective short circuit current of 100 A.

Demands to mains supply safety for the application in accordance with IEC 60601-1, ed. 3.2, § 8.11.5

Approvals:

CAL40

EN IEC 60601-1
ANSI/AAMI ES60601-1
CAN/CSA-C22.2 NO. 60601-1
EN IEC 60601-1-2

CAL40+

EN IEC 60601-1
ANSI/AAMI ES60601-1
CAN/CSA-C22.2 NO. 60601-1
EN IEC 60601-1-2
RED (EU)
FCC ID (US)
IC ID (Canada)
Telec (Japan)

Instructions for use

- Default functionality – when charging, the LIFT40 will not be able to operate any actuators
- It is only possible to use the battery BAL40 with either of the CAL40 control boxes
- Use only original LINAK mains cables to ensure proper connection to internal charger

General functionality – LIFT40

Remove battery

1) Lift handle upwards to release lock

2) Grab handle, pull out and slightly to the right

3) Lift off the battery - carry in handle



Mounting battery

1) With open handle - position battery base over the guide track and lower it in place

2) Steer in upper part of battery

3) Press down handle to lock battery in place

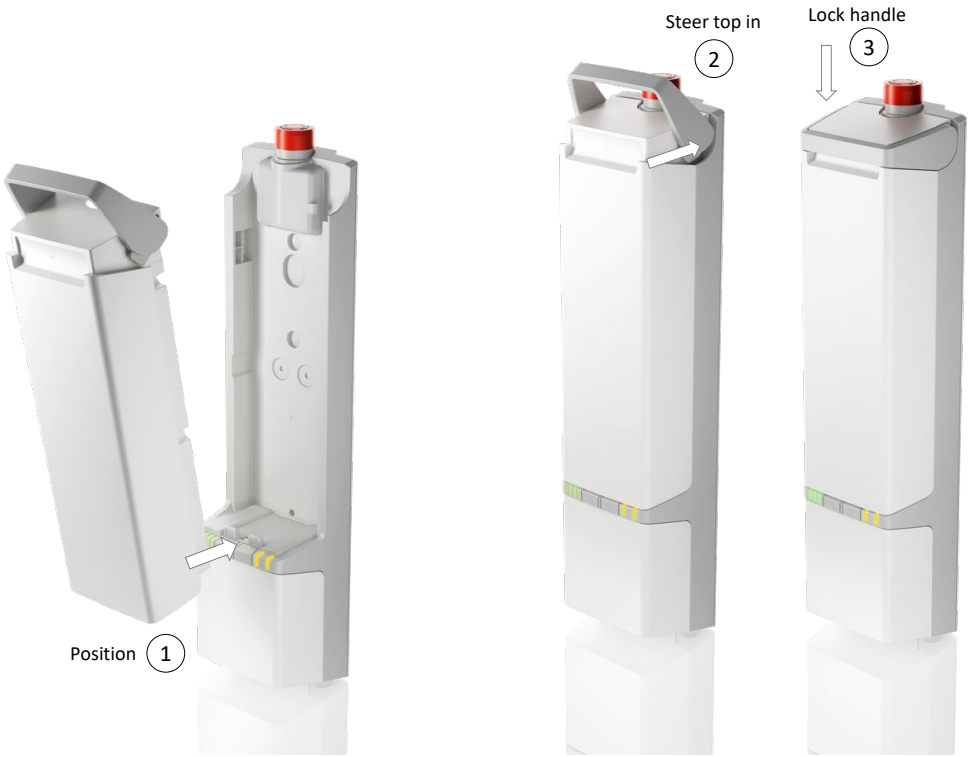

Mounting of cables and cable cover

LIFT40 control boxes have a uniquely designed cable cover which also works as an integrated cable cover when closed.

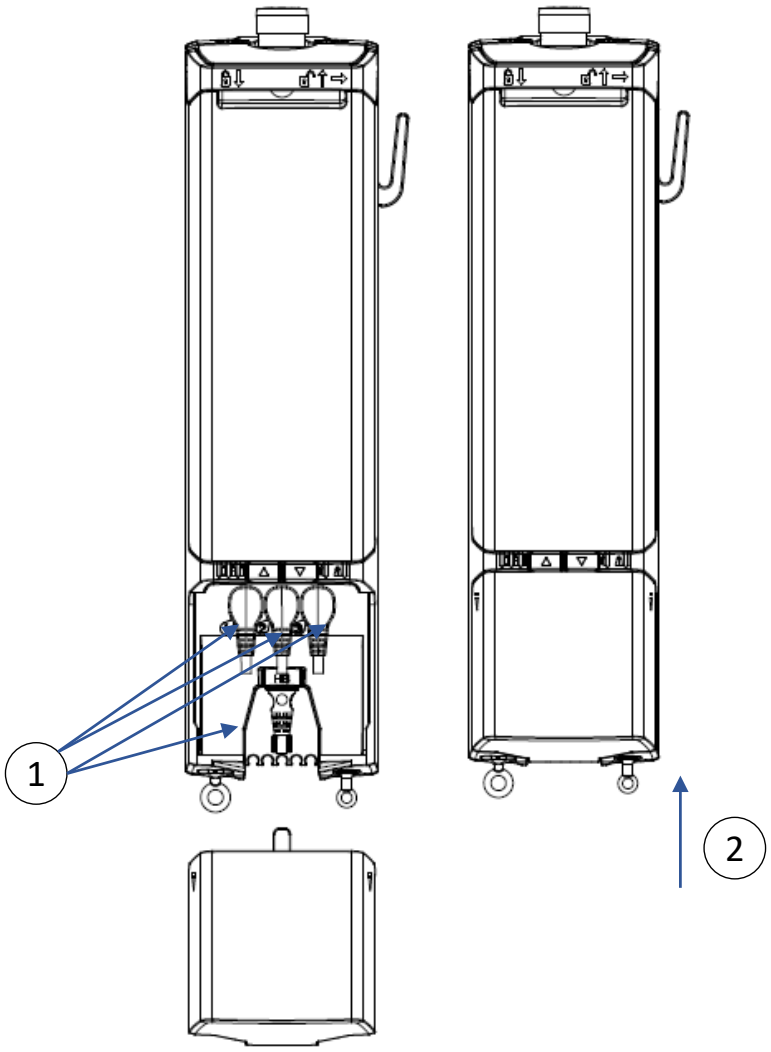

To close cable cover:

- mount cable plugs in control box (1)
- push in the hand control cable locking mechanism
- slide cable cover directly into designated groove until locked (2)

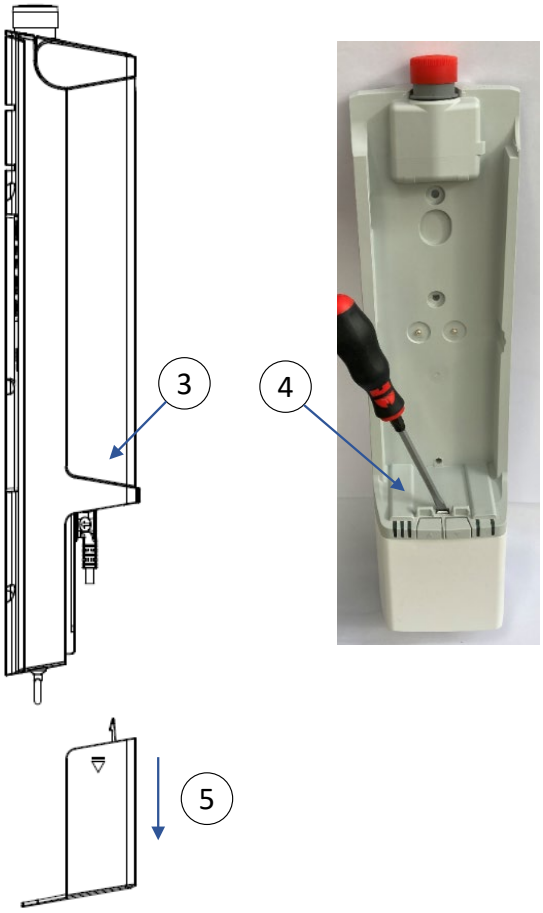

To open cable cover:

- below battery (3)
- insert flat head screwdriver in groove. Twist carefully and release cable cover lock (4)
- pull cable cover downwards and release from grooves (5)

Cable routing and management

Cable management is possible on the control box backside. The wire grooves can be used for many different purposes, for instance:

1. Guide cable for sling adjustment actuator upwards
2. Guide hand control cable up and out in low or high position to right or left side of patient lift

Cable hanger

CAL40 comes with a cable hanger for parking mains cable or hand control when not in use.

The cable hanger can be located on either the left or right side of the control box.

Place hanger in designated grooves on the back before mounting the control box on the patient lift. When mounted, the hanger is locked in place.

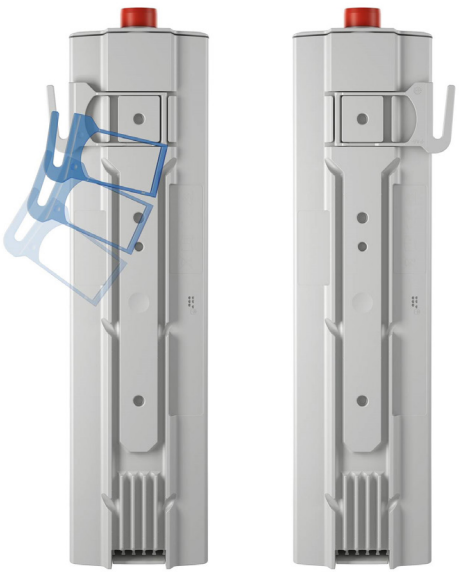

LED indicators

Battery indication CAL40+			
	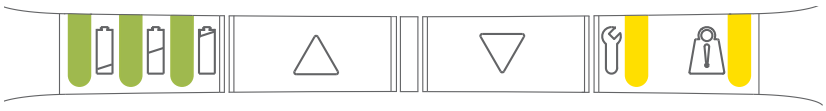		
LED1 - LED2 - LED3	**LED state**	**Capacity**	**Buzzer**
	LED 1-3 constantly on	Full	-
	LED 1-2 constantly on		
	LED 1 constantly on	Low	Single beep on key activation
	LED 1, left side, switches from green to orange and flashes slowly	Two cycles left	Buzzing continually when voltage has dropped below threshold limit

Charging indication CAL40+	LED state
LED1 - LED2 - LED3	
	Charging with internal charger
	Fully charged /ready for use
	On mains without battery mounted
	Turn off mains
	For use with external charger CH01, please see CH01 usage details



LED indicators

System status CAL40+		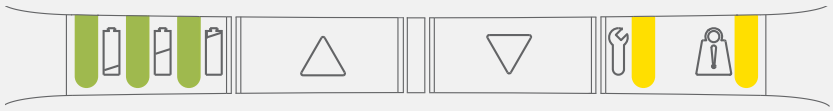				
PRIORITY	**LED4 + LED5**	**LED state (Not listed = off)**	**States in normal use**	**Comments**	**Reset**	**Buzzer**
0		LED 4 flashing according to BLE pairing state	Pairing BLE	Not ready to operate	Wait until ready	Buzzer in accordance with BLE pairing state
1		LED 4+5 constantly on (only when key is pressed)	Emergency stop activated	Not ready to operate	Release emergency stop button	-
2		LED 4+5 flashing fast (synchronous)	FATAL ERROR Cannot operate, has to be reset	No movement possible	Reset fatal error routine	Buzzer on key press
3		LED 5 constantly on	SWL active			
4		LED 5 flashing	SWL confirmation			Buzzer in accordance with learn function
5		LED 5 flashing slowly	Overload on CH1	Overload state kept for 10 sec. Momentary not ready to lift.	Reduce load	Beeps twice
6		LED 4 flashing slowly	Duty cycle guard	Momentary not ready to lift	Wait until ready	-
7		LED 4 constantly on	Service needed	Operation is possible	SDT, App, HB	-

LED indicators

Battery indication CAL40	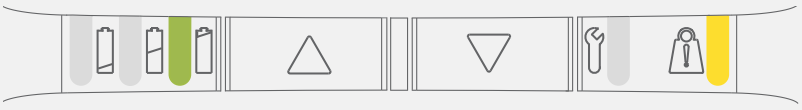		
LED3	**States in normal use**	**LED state (not listed = off)**	**Buzzer state (not listed = off)**
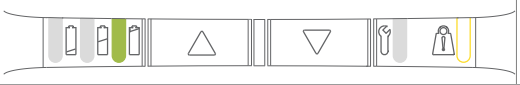	High	LED constantly on	
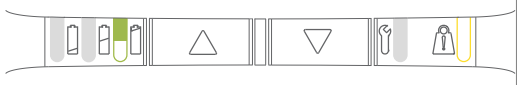	Low (needs charging)	LED slowly flashing	Single beep at start of key activation
	Two cycles left	LED slowly flashing/ synchronous/toggling + buzzer active	Constant

Charging indication CAL40	**LED state**
LED 3+5	
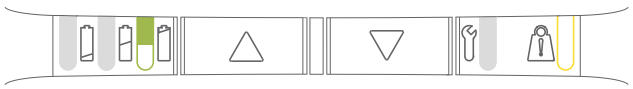	Charging with internal charger
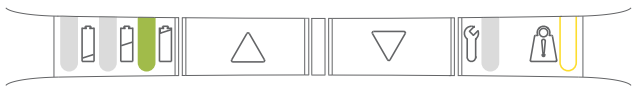	Fully charged /ready for use
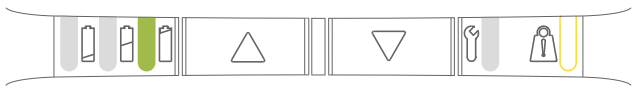	On mains without battery mounted
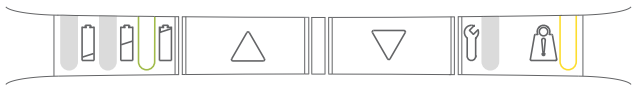	Turn off mains
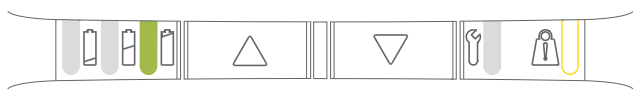	For use with external charger CH01, please see CH01 usage details

LED indicators

System status CAL40	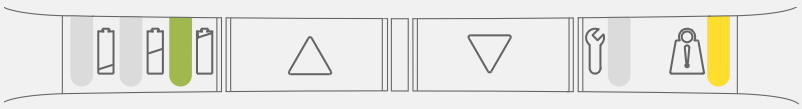					
PRIORITY	**LED 3+5**	**LED state (not listed = off)**	**States in normal use**	**Comments**	**Reset**	**Buzzer**
0		LED 5 constantly on (only when key is pressed)	Emergency stop activated	Not ready to operate	Release emergency button	
1		LED 3+5 slowly flashing (asynchronous/ toggling)	SWL confirmation	New current limit stored. Ready to operate		Single beep
2		LED slowly flashing	Overload	Momentarily not ready to lift	Reduce load	Beeps twice
3		LED constantly on	Duty cycle guard	Momentarily not ready to lift	Wait until ready	No buzzer

How to use learn mode

With LIFT40 it is possible to configure the safe working load limit by use of the learn mode function. The learn mode function is performed with a special learn mode hand control or customised hand control.

	SWL
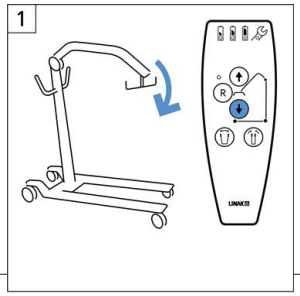	Drive the lifting arm down and connect the special SWL adjustment hand control.
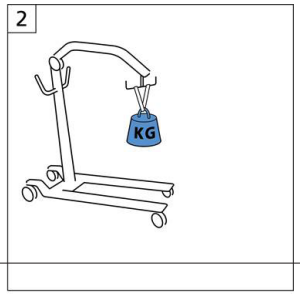	Add load to the lift corresponding to SWL for the lift type.
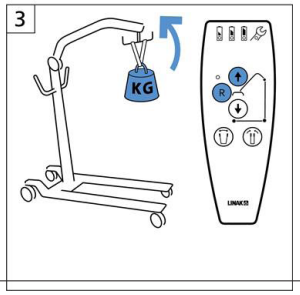	Press the 'R' and 'UP' buttons simultaneously and move the lifting arm up. If performing the standard SWL adjustment, it is possible to use the standard learn mode function without moving the actuator a full stroke, but it must be ensured that the lifting is carried out in the area where the lift has the biggest load.
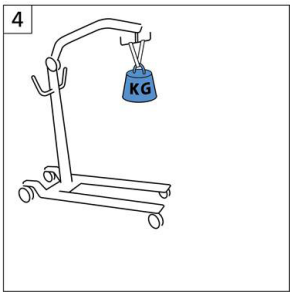	When the actuator stops running, the largest current value is registered and stored in the control box SW. When the current cut-off value is stored, the control box will provide an audio signal and a flashing LED, depending on the SW configuration.

Recommendations

- Always use locking mechanism and O-ring.
- Using learn mode function to adjust the SWL allows easy current limit setting to help the lift comply with the ISO 10535 requirement.
- The learn mode function is recommended to use for channel 1 when adjusting the lifting actuator to fit the SWL load rating of the lift.
- Based on settings from using the learn mode function, the lift shall not be able to lift more than 1.5 times the maximum load. However, the current limit setting will not stop the actuator at the exact same load as used for the SWL adjustment. This is due to the fact that an actuator uses less current when its components have been run in.
- SWL adjustment: When the current limit has been registered, the control box will allow the actuator to draw the registered current plus an addition of 10%. This ensures that the lift can lift the set load, however it cannot lift more than 1.5 times of the set load.
- When making new current limit settings, be aware to use a defined set of actuator and control box. To ensure that a new current limit setting is stored in the control box, either the learn mode function must be active for at least 2 seconds or the actuator has to run minimum of 20 mm. The actuator current consumption must be at least 2 A for minimum 2 seconds during the use of the learn mode function.
- Always use fully charged batteries (as a minimum more than 50% battery capacity) for SWL adjustment procedures.
- The ambient temperature must be approx. 20 °C.
- The difference between the highest and lowest load should exceed 10% if using the standard learn mode function.
- To activate the learn mode function, use the special SWL adjustment hand control.
- If an actuator or a control box is replaced, it is necessary to reset the maximum load to ensure the correct cut-off value for the new system.
- The preset current cut-off value of a specific lift can be reset by means of the learn mode function, however, this may not be in accordance with EN10535 if done with different loads than the rated load of the lift.

Pairing BLE hand control

When pairing a wireless hand control, follow this instruction:



Move within two meters of the patient lift.

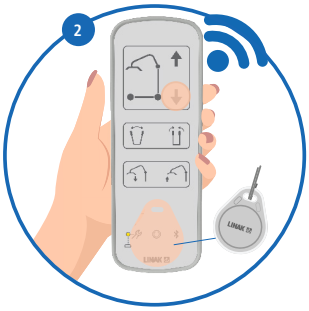

Enter Direct Pairing Mode by activating key 1 and magnet in 3 seconds.



Release key and magnet and move closer to the LIFT40+™ until buzzer frequency change from slow to fast.



Confirm pairing by pushing key 1

How to

pair a LINAK® Wireless LIFT40+™



Double confirmation beep - Pairing OK

LIFT40 mounting

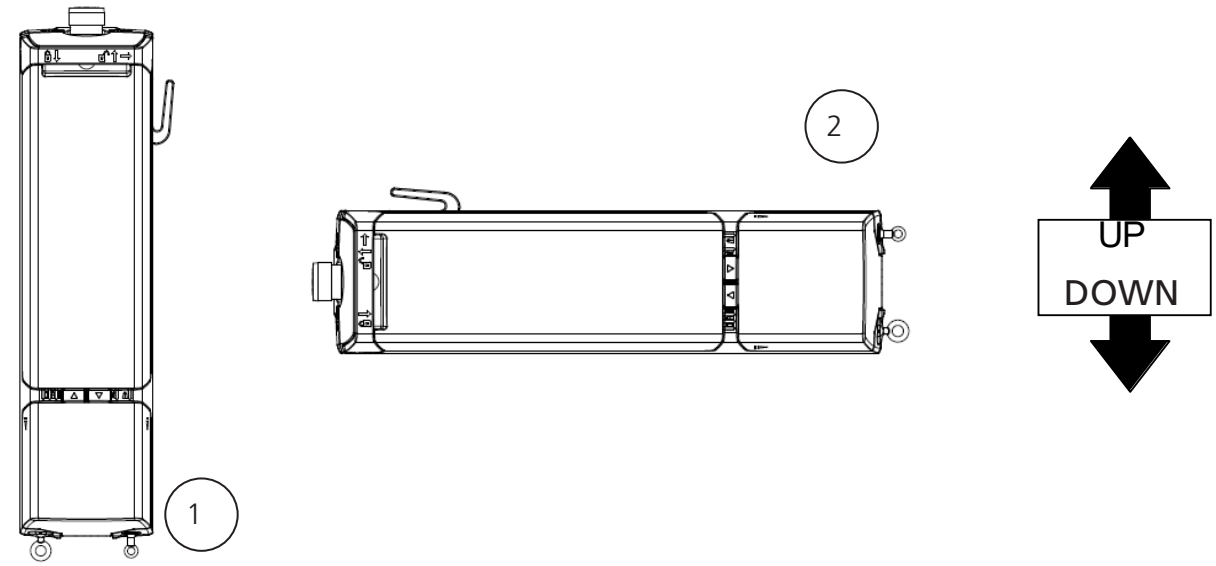

Recommendations - positioning

LIFT40 only complies with IPX6 when the control box is mounted correctly (see illustration 1 and 2).

LIFT40 can be mounted as shown on the pictures above:

- Battery upwards, cable outlets downwards (see illustration 1)
- Control box lying on the left side, seen from the front (see illustration 2)

Cables and blind plugs must be inserted correctly in the control box to maintain the IP degree in washing or cleaning situations.

Mounting information

LIFT40 is mounted by means of minimum 2 screws (not supplied by LINAK).

Screw type: ISO7380-1 / M5 and L = 20 mm or 25 mm

Washer type:

ISO7089 / M5, d1 = 5.3 mm / d2 = 10 mm / s = 1mm

The LIFT40 control box must be mounted with minimum two of the three screws possible.

The mounting screws for the control box and the charger must be tightened with a maximum torque of 1 Nm.

When mounting CAL40 or CAL40+ on a patient lift, please use at least two of the three dedicated mounting holes in the charger body.

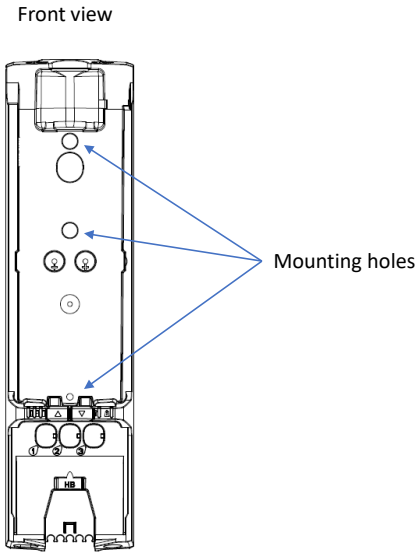

Recommendations

- The control buttons of redundant hand controls for lifting and lowering work as normal hand control buttons.
- Please be aware that loss of power might occur due to the battery deep discharge protection. This will only be the case if the battery is continually being used despite a warning.
- The service counter is only active in CAL40+ when a sufficiently charged BAL40 is mounted.
- The battery pack BAL40 must not be removed in cleaning situations, doing so could result in non-compliance with IPX6.
- If LIFT40 is fitted with a mains power connector, the protection plug must always be inserted to ensure the IP protection, if the port is not used.
- Only use original LINAK mains cables to ensure a proper connection to the internal charger.
- When charging, LIFT40 will not be able to operate any actuators.
- The LIFT40 DC plug is intended for charging of the BAL40 battery. Using the DC plug for powering external equipment can lead to battery drainage or discharge.
- Only use correct LINAK charger (CHL40, CH01 or integrated LIFT40 charger).
- When customising CAL40 software via LIXedit tool, be sure to follow LINAK actuator parameters for current settings to ensure correct compatibility of actuators and CAL40.

Warnings

- Never connect the programming box directly to the hand control port.
- To avoid injury, the battery should not be mounted in transport situations. Use LINAK original packaging to store battery during transportation.
- Use blind plug when cleaning/washing down to maintain the IP degree.
- When using a control box with emergency stop, the stop button must be activated in cleaning situations to avoid unintended operation of the lift.
- In order to avoid injury, the emergency stop should be activated in all transport and cleaning situations.

BAL40



The BAL40 lead acid battery pack is part of the LIFT40 product series specially developed for patient lifts.

Usage

Compatibility:	CAL40/CAL40+/CHL40
Duty cycle:	Max. 10% or 2 minutes continuous use followed by 18 minutes without use at a max. discharge current of 10 A
Charging:	Via external wall charger CHL40 and CH01 or via CAL40 or CAL40+ with internal charger.
Recharging during storage:	First battery recharge must be no later than 6 months after the production date stated on the label. Hereafter, the battery must be recharged at least every 6 months.
Operating temperature:	+5 °C to +40 °C
Charging temperature:	+5 °C to +40 °C Charging at high ambient temperatures can impact the charging time.
Storage temperature:	-15 °C to +40 °C (+10 °C to +25 °C - recommended) The batteries must be stored in an applicable storage room without direct sunlight.
Relative humidity:	20%-80% – non-condensing
Atmospheric pressure	700 to 1060 hPa
Meters above sea level:	Max. 3000 meters
Approvals:	IEC 60601-1 ANSI/AAMI ES60601-1 CSA CAN/CSA-C22.2 NO. 60601-1 IEC 60601-2

General functionality – LIFT40

Taking off battery

1) Lift handle upwards to release lock

2) Grab handle, pull out and slightly to the right

3) Lift off the battery - carry in handle

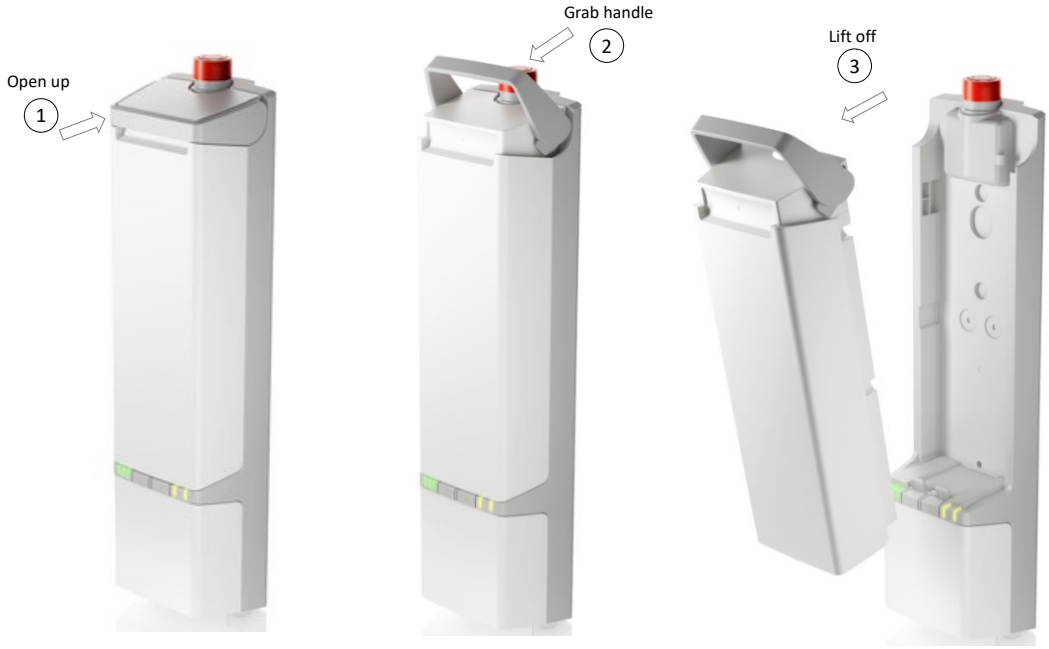

Mounting battery

1) With open handle (1) - position battery base over the guide track and lower it in place

2) Steer in upper part of battery

3) Press down handle to lock battery in place

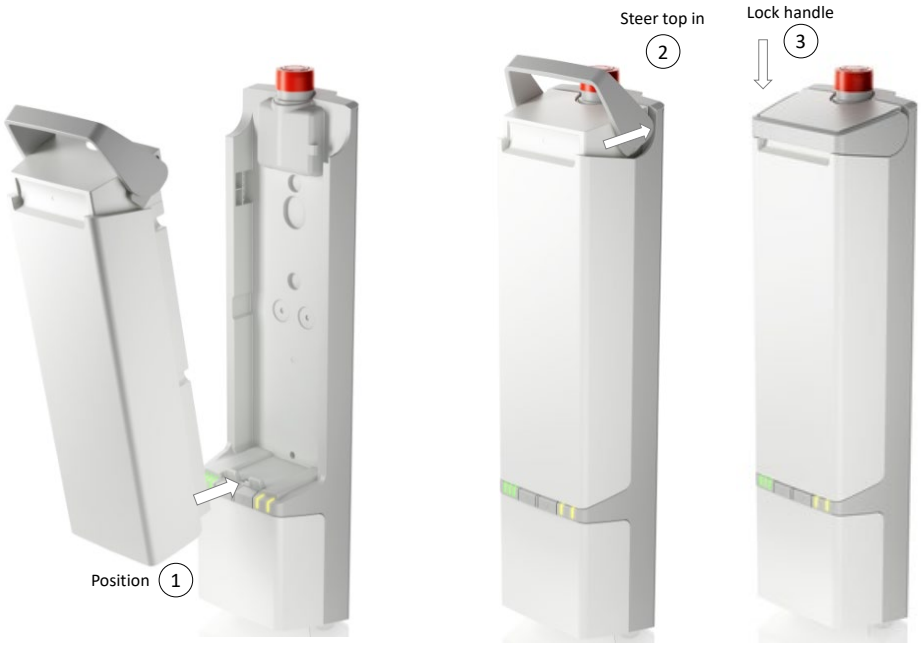

Recommendations

- Do not exceed the storage temperature as it will shorten the product life and performance.
- Allow the battery to settle to room temperature before use or charging.
- Only use correct LINAK charger (CHL40 or integrated charger in the CAL40 or CAL40+ control box).
- Do not exceed the duty cycle as it will shorten the product life, reduce performance and eventually activate excess temperature protection.
- BAL40 is not intended for use in outdoor applications and indoor pool environments.
- If the battery is completely discharged, then recharge the battery before storage.
- Always use correct LINAK charger.

Warnings

DO NOT:

- heat, burn or short-circuit the batteries
- expose the batteries to high impact
- drop, crush or puncture the batteries
- use batteries with signs of damage or corrosion
- charge or store the batteries near combustible material
- charge the batteries without supervision
- overcharge or fully discharge the batteries
- exceed IP ratings

Any of the above mentioned can cause fire or injury.

Check at regular intervals that the ventilation hole is undamaged and intact.

The construction of the **ventilation hole** permits battery gasses to get out, but it does not permit penetration of water.

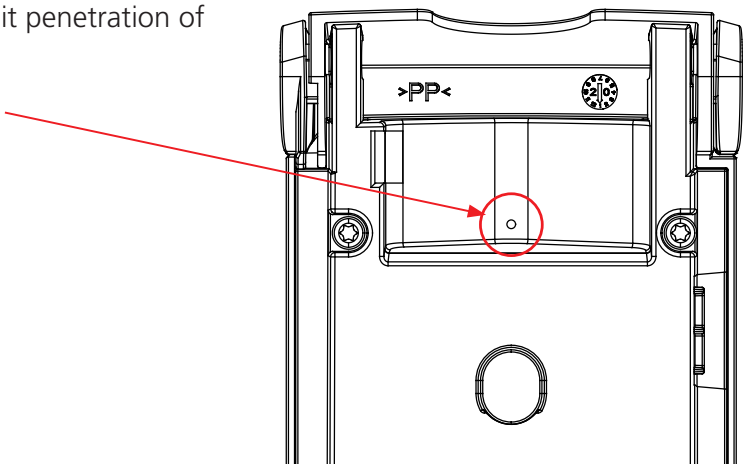

CHL40 External Charger



The CHL40 charger is an important part of the LIFT40 family. It functions as a wall charger when mounted on the wall, but also as a more mobile charger simply placed horizontally on its back on any surface.

Usage

Usage temperature:	+5 °C to 40 °C
Storage temperature:	-10 °C to 50 °C
Relative humidity:	20% to 80% - non-condensing
Atmospheric pressure:	700 to 1060 hPa
Height above sea level:	Max. 3000 meters
Nominal current draw:	Max. 500 mA (CH01 spec)
Power consumption (standby):	Max. 2.5 W
Power consumption (charging):	Max. 19 W
Approvals: (pending)	IEC 60601-1 ANSI/AAMI ES60601-1 CAN/CSA-22.2 No. 60601-1 Australian deviation, Canadian deviation

LED functionality

The charger indicates whether it is connected to mains (green LED) or whether the battery is being charged (orange LED).

Charger mounting/position

The LIFT40 charger CHL40 can be placed for use in two different ways. It is designed for mounting flat on the wall by using minimum 2 of 3 screws in the Ø4 mm holes in the charger body. Screw types and wall plugs may vary depending on wall material.

The charger can also be placed flat on a table or desk. The dedicated rubber studs on the charger back ensure that the charger stays safely at the same position during charging (see drawings).

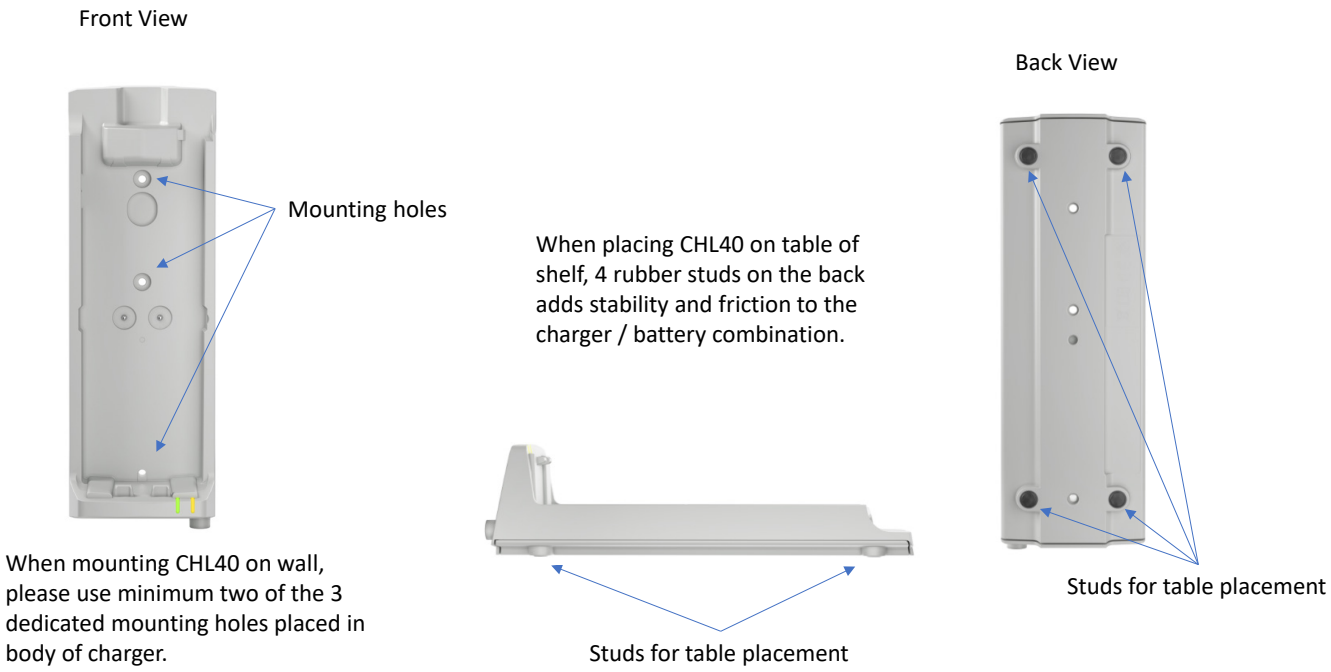

Mounting information

CHL40 is mounted by means of minimum 2 screws (not supplied by LINAK).

Screw type: The screw type depends on the wall type and has to be defined by the service technician.

Washer type: ISO7089 / M5, d1 = 5.3 mm / d2 = 10 mm / s = 1mm.

The CHL40 charger must be mounted with minimum two of the three screws possible.

The mounting screws for the control box and the charger must be tightened with a maximum torque of 1 Nm.

To be able to comply with the IPX4 rating, the CHL40 must hang on the wall.

The charger must be disconnected from mains in cleaning situations.

Recommendations

- Only use original LINAK components and accessories for full compatibility.
- Only use CHL40 charger for BAL40 battery charging.
- The charger CHL40 is specifically designed to charge the BAL40 battery.
- Special care should be taken when mounting the CHL40.
- If the CHL40 is mounted correctly, the CHL40 complies to IPX4.
- If the CHL40 is mounted incorrectly, water may enter the screw holes resulting in
- IPX4 non-compliance and cause malfunction and hazardous situations.
- In cleaning situations, the charger must be disconnected from mains.

COL50 MK2



The control box COL50 MK2 is a part of the LIFT50 product series specially developed for patient lifts.

LIFT50 is a complete system consisting of the control box COL50 MK2, a battery BAL50 and an external charger CHL50 in a flexible solution. Combined with one or more actuators and a hand control, you have a complete system for modern patient lifts.

Usage

With internal charger:	Nominal current draw max. 350 mA (depending on input voltage)
	Power consumption (standby) max. 0.5 W power (depending on input voltage)
	Input voltage range: 120-240 VAC (50/60 Hz)
	Power consumption (charging) max. 30 W (depending on input voltage)
Duty cycle:	Max. 10% or 2 min. continuous use followed by 18 min. without use
Operating temperature:	+5 °C to +40 °C
Storage temperature:	-10 °C to +50 °C
Relative humidity:	20% to 80% - non-condensing
Atmospheric pressure:	700 to 1060 hPa
Meters above sea level:	Max. 3000 meters

Mains supply grid should be limited to the highest prospective short circuit current of 100 A.

Demands to mains supply safety for the application in accordance with IEC 60601-1, ed. 3.2, § 8.11.5.

Approvals:	EN IEC 60601-1 ANSI/AAMI ES60601-1 CAN/CSA-C22.2 NO. 60601-1 EN IEC 60601-1-2 RED (EU) FCC ID (US) IC ID (Canada) Telec (Japan)

Instructions for use

- Default functionality – when charging, the COL50 MK2 will not be able to operate any actuators.
- It is not possible to use other battery types than BAL50 with the COL50 MK2.
- Use only original LINAK mains cables to ensure proper connection to internal charger.

General functionality

Battery on/off

LIFT50 has a new and ergonomic battery design.

Remove battery

1) Use thumb and index/middle finger to push buttons on battery sides

2) Pull battery out

Mounting battery

3) and 4) Grab battery on sides and steer battery base over steering pin, push in place



Please follow the mounting instructions of the control box COL50.

Do not mount the battery upside down.

Emergency stop instructions

Emergency stop activation/deactivation

The emergency stop is mounted on top of the BAL50 battery. It is readily available as the norm describes.

Operation to activate emergency stop

1) Push button on top of battery

To release emergency stop

Take off battery

2) Use thumb and index/middle finger to push buttons on battery sides

3) Pull battery out

To replace the battery again

4) Grab battery on sides and steer battery base over steering pin.

5) Push in place

This will release the emergency stop.



Cable mounting and cable cover

COL50 has a uniquely designed cable cover which also works as an integrated cable cover when closed.

To close cable cover

1) Mount cable plugs in control box (1)
2) Push cable cover directly over designated snaps (2)

To open cable cover

3) Insert flat head screwdriver in groove (3).
   Move screwdriver handle carefully towards the back of COL50. Cable cover is released
4) Pull cable cover straight out (4)

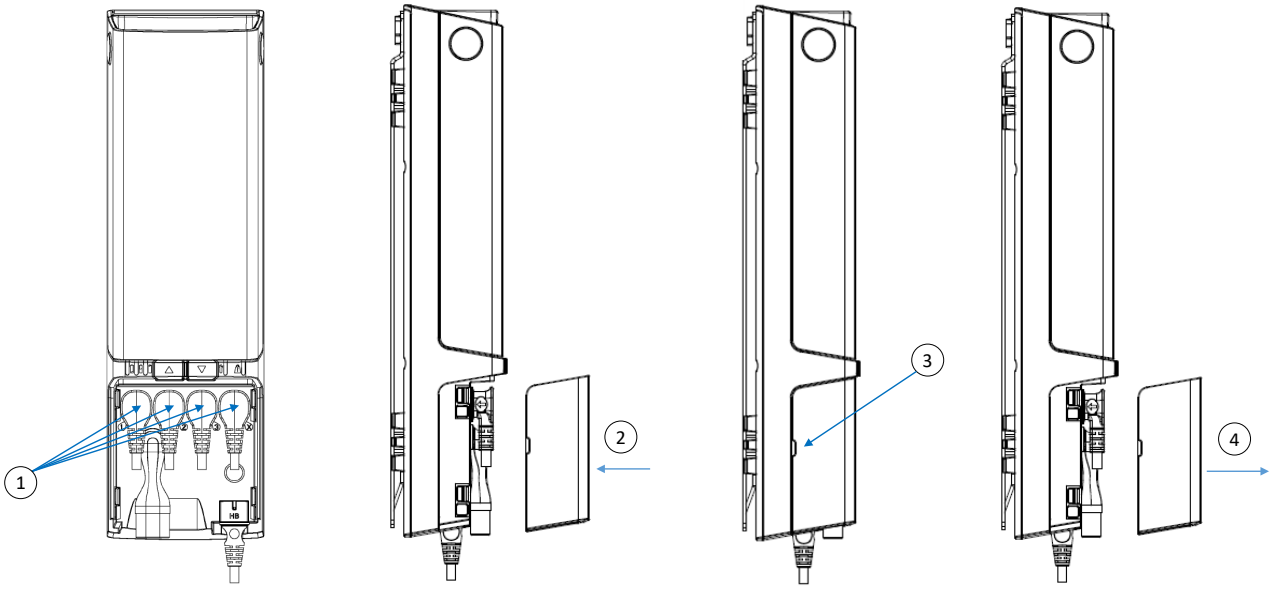

How to open cable cover with screwdriver

Refer to the description above.

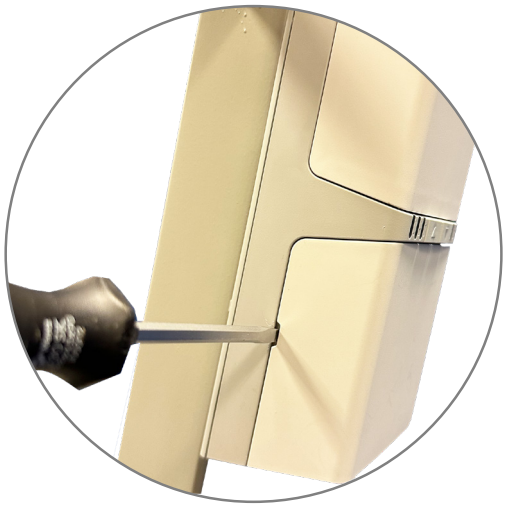

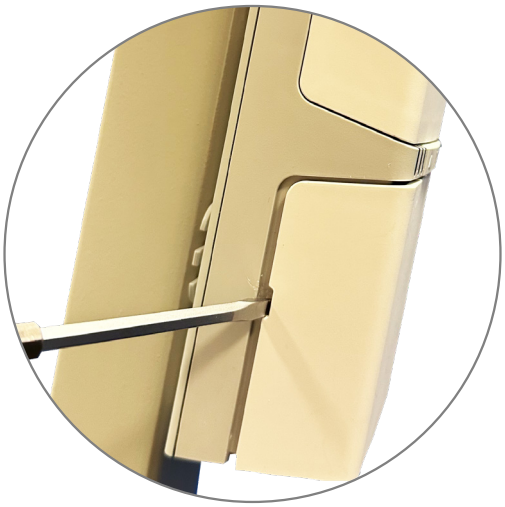

Cable routing and management

Cable management is possible on the COL50 MK2 backside. The wire grooves can be used for many different purposes, for instance:

1. Guide cable for sling adjustment actuator upwards
2. Guide hand control cable up and out in low or high position to right or left side of the application



Cable hanger

COL50 MK2 comes with a cable hanger for parking mains cable or hand control when not in use.

The cable hanger can be located on either the left or right side of the control box.

Place hanger in designated grooves on the back before mounting the control box on the patient lift steel bracket.

When mounted, the hanger is locked in place.



LED indicators

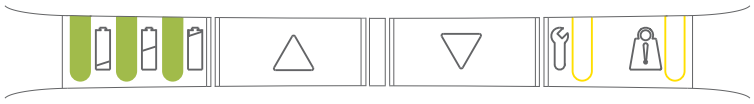

LED1 - LED2 - LED3	LED state (Not listed = off)	States in normal use
	LED 1-3 constantly on	75-100% SOC
	LED 1+2 constantly on	50-75% SOC
	LED 1 constantly on	<50% SOC
	LED 1 left side, switches from green to orange and flashes slowly	Buzzer activates when 200 mAh is left in the battery. The customer needs to test own application to check if this is sufficient to fulfil the minimum requirement of one lift and lowering (1 cycle). Software can be adjusted if buzzer level needs to be increased.



LED indicators

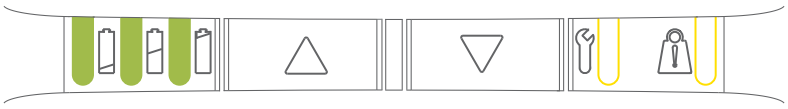

LED1 - LED2 - LED3	LED state (Not listed = off)	States while charging
	LED 1-3 constantly on	90-100%
	LED 1+2 constantly on LED 3 flashes slowly	65-90%
	LED 1 constantly on LED 2 flashes slowly	40-65%
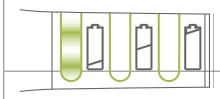	LED 1 flashes slowly	0-40%
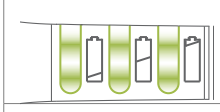	LED 1+2+3 flash slowly	Charging stopped due to low battery temperature, high battery temperature or other error conditions
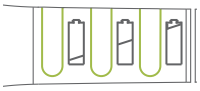	No light in LEDs	Charging stopped due to lost communication to battery



LED indicators

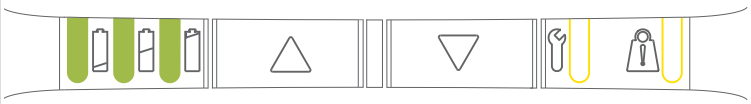

PRIORITY	LED4 + LED5	LED state (Not listed = off)	States in normal use	Comments	Reset
0		LED 4 flashing according to BLE pairing state*	Pairing BLE	Not ready to drive	Wait until ready
1		LED 4+5 constantly on	Emergency stop activated	Not ready to drive	Reactivate emergency stop
2		LED 4+5 flashing fast (synchronous)	FATAL ERROR Cannot drive, has to be reset	No movement possible	Reset fatal error routine
3		LED 4+5 flashing slowly (asynchronous toggling)	Not learned/ configured correctly	Not ready to drive	Learn device, configure correct
4		LED 5 flashing slowly	OVERLOAD on CH1	Momentary not ready to LIFT	Reduce load
5		LED 4 flashing slowly	Duty cycle guard	Momentary not ready to LIFT	Wait until ready
6		LED 5 constantly on	Position not to be trusted	Drive is possible	Drive into EOS
7		LED 4 constantly on	Service needed	Drive is possible	SDT, App, HB

How to use Direct Pairing

1. Enter pairing mode
2. When in pairing mode, the control box buzzer will begin to beep and the LED starts to blink
3. Move the hand control closer to the control box with which you want to pair
4. Pair the hand control with the control box
5. The control unit LED will begin to blink with the same frequency as the nearest control box



Move within two meters of the patient lift.



Enter Direct Pairing Mode by activating key 1 and magnet in 3 seconds.



Release key and magnet and move closer to the LIFT50 until buzzer frequency change from slow to fast.



Confirm pairing by pushing key 1

How to
pair a LINAK® Wireless LIFT50



Double confirmation beep - Pairing OK

How to use the learn mode function

With the COL50 it is possible to configure software for the use of standard or advanced learn mode function or even both if needed. When preparing the control box software, it is possible to make preparations for the use of standard learn mode hand control or the use of customised hand control.

	Standard learn mode	Advanced learn mode
Basic condition	To ensure that a new current limit setting is stored in the control box, the learn mode function must be active for at least 2 seconds and the actuator current consumption must be at least 2 Amp during the use of the learn mode function.	To ensure that a new current limit setting is stored correctly in the control box, the physical actuator stroke length shall fit the specified stroke length in the SW.
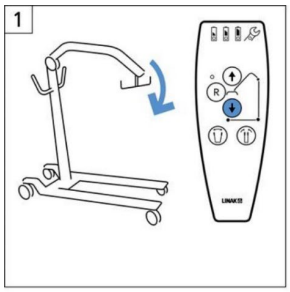	Drive the lifting arm down and connect the special learn mode hand control.	Drive the lifting arm down and connect the special learn mode hand control.
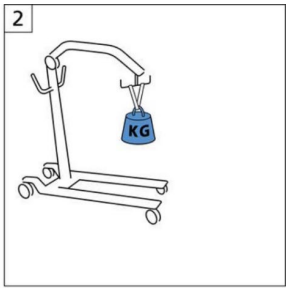	Add load to the lift corresponding to SWL for the lift type.	Add load to the lift corresponding to SWL for the lift type.
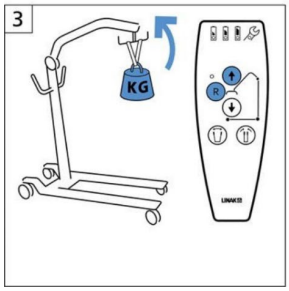	Press the 'R' and 'UP' buttons simultaneously and move the lifting arm up. If using the standard learn mode, then it is possible to use the standard learn mode function without moving the actuator a full stroke, but it must be ensured that the lifting is carried out in the area where the lift has the biggest load.	Press the 'R' and 'UP' buttons simultaneously and move the lifting arm up. For use of advanced learn mode, it is required and important to run a full stroke while registering the new current limit settings. This will cover different load requirements over the stroke length.
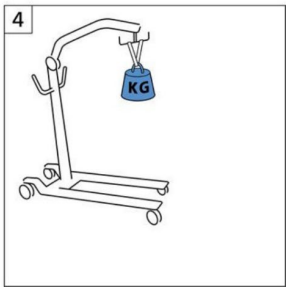	When the actuator stops running, the largest current value is registered and stored in the control box SW. When the current cut-off value is stored, the control box will provide an audio signal and flashing LED, depending on the SW configuration.	When the actuator stops running, a data set of new current limits has been registered and stored in the control box SW. The data set contains pairs of values for current consumption in different stroke length sections. When the current cut-off data set is stored, the control box will provide an audio signal and flashing LED depending on the SW configuration.

Recommendations - learn mode

- Using the learn mode functionality allows easy current limit setting to help the lift comply with the ISO 10535 requirement.
- The learn mode functionality is recommended to use for channel 1 when adjusting the lifting actuator to fit the safe working load rating of the lift.
- Based on settings from the learn mode function use, the lift shall not be able to lift more than 1.5 times the maximum load. However, the current limit setting will not stop the actuator at the exact same load as used for the learn mode function. This is due to the fact that an actuator uses less current when its components have been run in.
- When making new current limit settings, be aware to use a defined set of actuator and control box.
- For learn mode, the following conditions must be fulfilled:
  When using standard learn mode, the actuator current consumption must be at least 2 Amp and the function must either be active for at least 2 seconds or the actuator must run at least 20 mm.
  When using advanced learn mode, the actuator stroke length must be specified in the software.
  Run the actuator to full stroke length to set new current limits.
- Always use fully charged batteries (as a minimum more than 50% battery capacity) for learn mode procedures.
- A maximum cut-off value of 12 Amp can be registered (stored).
- The ambient temperature must be approx. 20 °C.
- The difference between the highest and lowest load should exceed 10% if using the standard learn mode function.
- To activate the learn mode function, use the special learn mode hand control.
- If an actuator or control box is exchanged, it is necessary to reset the maximum load to ensure the correct cut-off value for the new system.
- The preset current cut-off value of a specific lift can be reset by means of the learn mode function, however, this may not be in accordance with EN10535 if done with different loads than the rated load of the lift.
- There is a risk of false position due to the use of manual lovering/quick release and this may therefore impact the use of advanced learn mode.

LIFT50 mounting

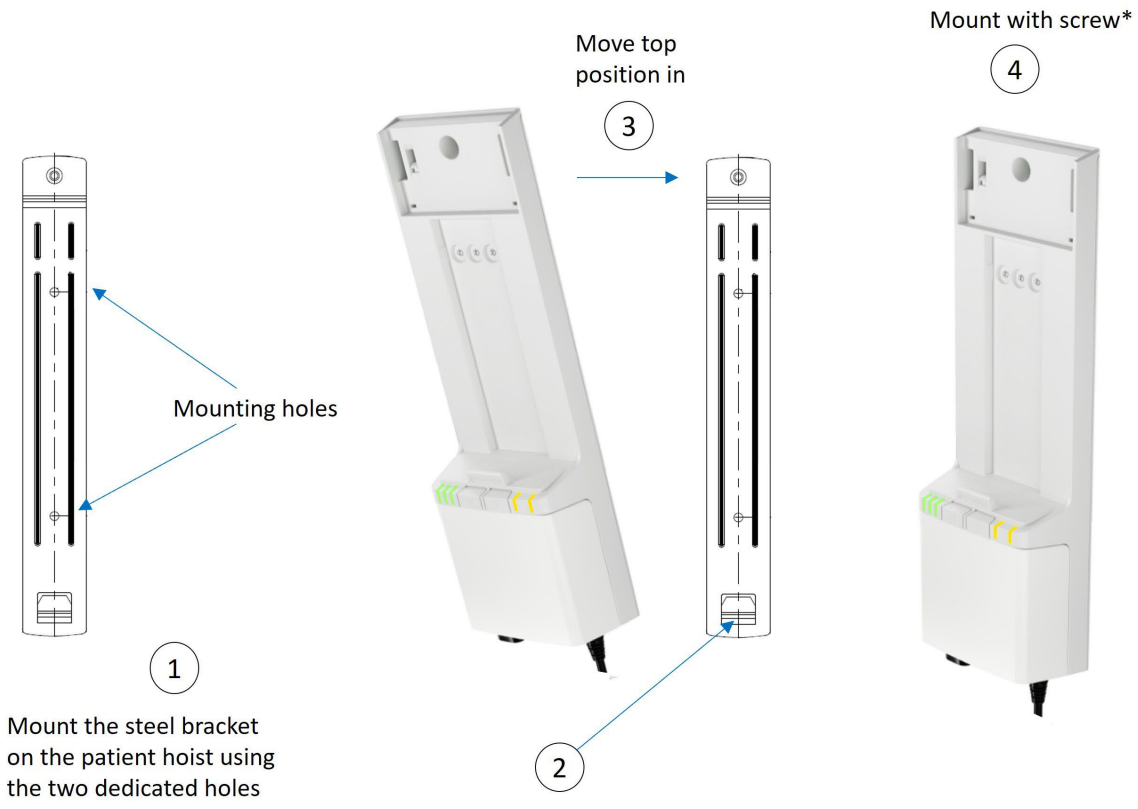

** The bracket kit includes 3 M5x10 mm screws. This is a special screw type (Bossard Ecosyn-grip) with a wide collar for improved fixing. Screw torque for the screw betweeen COL50 and the bracket must be max. 1 Nm.*

LIFT50 position for maintaining IP degree

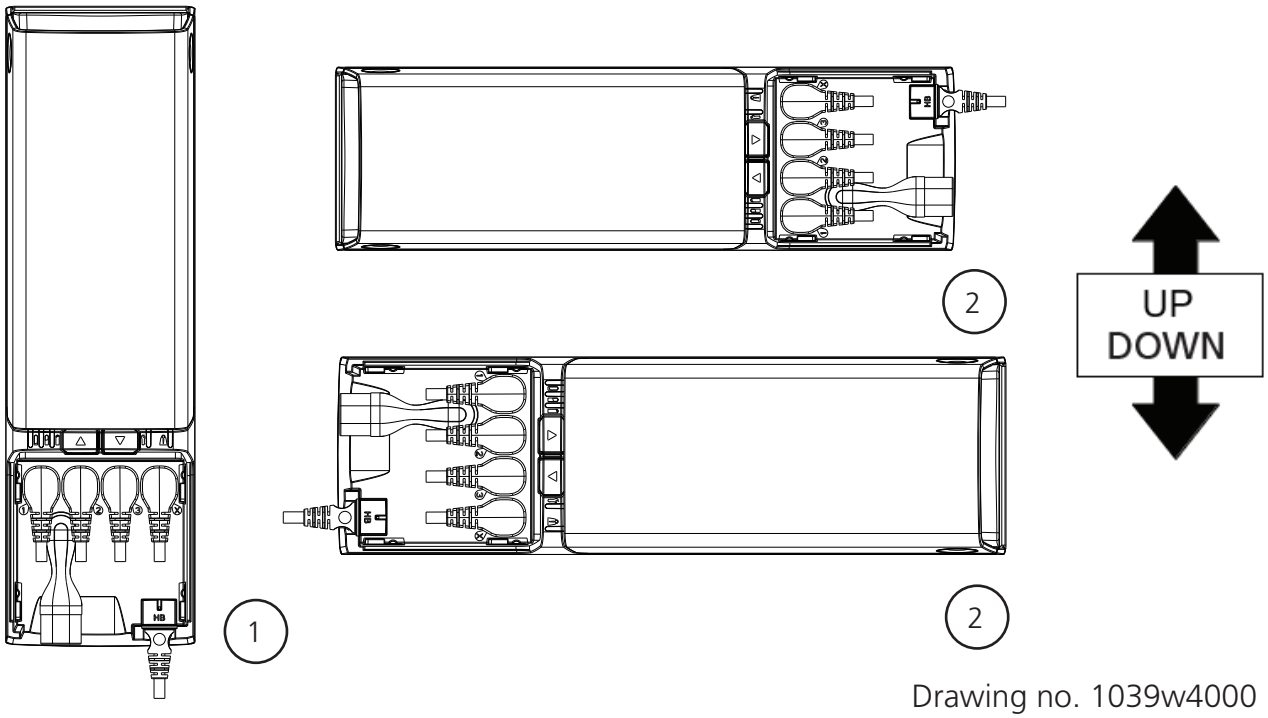

Drawing no. 1039w4000

Recommendations – positioning

LIFT50 only complies with IPX6 when the control box is mounted correctly (see illustration 1 and 2).

LIFT50 can be mounted as shown on the pictures above:

- Battery upwards, cable outlets downwards (see illustration 1)
- Control box lying on either side, seen from the front (see illustrations 2)

Cables and blind plugs must be inserted correctly in the control box to maintain the IP degree in cleaning situations.

Recommendations

- The control buttons of redundant hand controls for lifting and lowering work as normal hand control buttons.
- The service counter is only active in COL50 when a sufficiently charged BAL50 is mounted.
- Only use original LINAK® mains cables to ensure a proper connection to the internal charger.
- Only use correct LINAK charger (CHL50 or integrated charger in LIFT50).
- To avoid cables from being damaged by pulling, LINAK recommends to make safe cabling.
- Push mains cable fully into correct sockets and make sure that the plugs are completely inserted.
- In combination with BAL50, IPX6 Washable can only be guaranteed if a minimum interval of 24 hours between each wash is observed.

Motor cable

Always use 6-wire cables. Please note that angled motor cable plugs are required for connection to the control box.

Hot plugging

Removing or adding any OpenBus cables is not allowed when the control box is on power via mains supply or battery! If necessary anyway, follow this procedure:

1. Remove mains or battery and wait 5 seconds
2. Mount or dismount the required cables

If this procedure is NOT followed, it may result in a damaged OpenBus driver circuit. The risk of a damaged circuit increases if the accessory has a high start current (inrush current).

Warnings

- Always check correct assembly after mounting and service to ensure that the cable lock is mounted. (Connectors are usually removed during cleaning)
- Always use approved chemicals with the housing as the plastic may show corrosion caused by some chemicals. As a result water may accumulate/gather in housing.
- When using a control box with emergency stop, the stop button must be activated in cleaning situations to avoid unintended operation of the lift.
- Take special precautions concerning 3rd party interfacing. Please contact LINAK® for further information.
- Make a review of all product specifications before system set-up if the current cut-off limit is higher than the maximum allowed actuator current cut-off.
- Make a proper cable installation and inspect regularly for wear and damage to avoid cable interruption and actuator defects. Defective parts must be replaced.
- After service inspection, the application must be tested for correct functionality before it is put into operation to avoid actuator plugs being mixed during service. Operators must not be inside entrapment area.
- Inspect regularly for wear and damage to avoid electrical failure or system disturbance. Defective parts must be replaced.
- Make a proper cable installation to avoid short-circuit cables for hand controls and other controls. Regular inspection must be made for wear and damage. Defective parts must be replaced.
- To avoid injury, the battery should not be mounted in (all) transport situations. Use LINAK original packaging to store battery during transportation.
- Wireless: Be aware that a hand control can run an application that is out of sight.

BAL50



The BAL50 Li-Ion battery pack is a part of the LIFT50 product series specially developed for healthcare applications.

LIFT50 is a complete system consisting of the control box COL50, a battery BAL50 and an external charger CHL50 in a flexible solution.

Usage

Compatibility:	COL50 and CHL50
Duty cycle:	Max. 10% (or 2 min. continuous use followed by 18 min. without use) at max. discharge current (10 A)
Charging:	Via external wall charger CHL50 or via COL50 with integrated charger
Charging time (approx.):	4 hours
Charging temperature:	+5 °C to +40 °C Charging at elevated temperatures can impact the charging time.
Charging state:	Maximum 30% when shipped from LINAK (The battery is shipped from LINAK in deep sleep and will be woken by charging)
Recharging during storage:	No need for charging during storage when the battery is in deep sleep. If the battery is woken up, it is recommended to fully charge the battery and recharge at least every 24 months.
Operating temperature:	+5 °C to +40 °C
Charging temperature:	+5 °C to +40 °C Charging at elevated temperatures can impact the charging time
Storage temperature:	+10 °C to +40 °C (+10 °C to +25 °C recommended) The batteries must be stored in an applicable storage room without direct sunlight.
Transportation temperature:	-20 C to +40 °C
Relative humidity:	20% - 80% – non-condensing
Atmospheric pressure	700 to 1060 hPa
Height above sea level:	Max. 3000 meters
Cycles per charge (lifts/lowerings):	Approx. 40 cycles*
Warranty:	5 years
Approvals:	IEC 60601-1 ANSI/AAMI ES60601-1 CSA CAN/CSA-C22.2 NO. 60601-1 IEC 60601-2 IEC62133-2

Operating conditions:	The battery must be operated within the specified operating conditions and used together with a genuine LINAK charging and system solution. Modifications, repairs or other unauthorised interventions may affect battery performance, safety and service life. Battery condition is determined from battery data readouts, including battery throughput (Ah) and State of Health (SOH).

* Number of lifts and lowerings with a fully charged battery under the following conditions: Normal speed (COL50 and LA44), thrust up to 6,000 N

  Stroke: S = 200 mm. The actuator does not reach the end position at any time.

All BAL50 batteries produced in Denmark as of 1 January 2025 will have an extended warranty of 60 months (counting from manufacturing date).

All BAL50 batteries produced prior to this date will follow the standard 12 months warranty period for batteries.

Information

For lithium batteries, the LINAK system only charges the battery to full if the battery level is below 80%. This is to avoid increased wear and increase the lifetime on the lithium cells inside the battery.

Mounting

Mounting of the BAL50 battery will follow the placement of the COL50 and CHL50.

Deep discharge protection

The BAL50 has a deep discharge protection to extend the battery life. The deep discharge protection is activated when the battery is discharged.

If the battery is completely discharged, the charging will be started at a very small rate to protect the battery. Depending on the battery state, it may take several hours to get to the normal charging state.

For long-term storage, remove the battery from the application and store separately.

Transportation

The lithium ion batteries must be packed and transported according to applicable regulations. Always ask your local transportation provider how to handle the transportation of lithium ion batteries.

Recommendations

- Charge the battery fully before first use.
- Adhere to the battery storage temperature or else the product life and performance will be reduced.
- Allow the battery to settle to room temperature before use or charging.
- Only use correct LINAK® charger (CHL50 or integrated charger in COL50).
- Do not exceed the duty cycle as it will shorten the product life and reduce performance.
- BAL50 is intended for use in indoor applications, however not in indoor pool environments.
- Recharge the battery before storage if it has been completely discharged.
- In combination with COL50, IPX6 Washable can only be guaranteed if a minimum interval of 24 hours between each wash is observed.

Warnings

ALL LI-ION BATTERY USERS MUST READ THESE IMPORTANT BATTERY SAFETY INSTRUCTIONS AND WARNINGS BEFORE USING LI-ION BATTERIES.

Failure to read and follow these safety instructions and warnings may result in fire, personal injury, and equipment damage if the batteries are charged and/or used improperly.

Lithium ion batteries differ from the lead acid technology as they have a built-in deep discharge protection.

- In case of continuous use despite warnings, a power loss might occur due to the battery deep discharge protection. In this event, there may be no warning and the application may not be able to move when expected.
- If product caution is not clearly visible at low light intensity, read the product label instructions symbol. A warning must be included in the application manufacturer's manual for the medical device.
- The application manufacturer must test the application and ensure that intentional and unintended operations do not exceed the battery specification limits. The risk analysis for the final application must allow for the ensurance of alternative means to make movement, for instance quick release or manual lowering.
- Do not open, disassemble or modify the battery housing as cell or circuitry damage may develop excessive heat.
- Discontinue the battery use immediately if the battery emits an unusual smell, feels hot, changes colour or shape, shows signs of damage or corrosion or appears abnormal in any other way.
- In case the battery turns hot, disconnect and remove the battery from the room. If not possible to remove the battery, then evacuate the room.
- Defective or damaged lithium ion batteries or batteries that produce excessive heat or fire are not allowed for transportation.
- For safety reasons, please adhere to the indicated charging, storage, and operation temperature as extreme temperatures (low or high) might ignite the batteries and cause fire.
- The mounting instructions must be followed in order to avoid exposing batteries to water.
- The customer is responsible for determining that charger and host device work properly.
- Recharge batteries every 12 months at a minimum.
- Dispose of batteries in accordance with local regulations.

DO NOT:

- heat, burn or short circuit the batteries
- expose the batteries to high impact
- crush or puncture the batteries
- charge or store the batteries near combustible material
- charge the batteries without supervision
- expose the batteries to water or other liquids
- use the batteries in pool areas

Any of the above mentioned can cause fire or injury.

CHL50 External Charger



The CHL50 charger is an important part of the LIFT50 family. It functions as a wall charger when mounted on the wall, but also as a more mobile charger simply placed horizontally on its back on any surface.

Usage

Usage temperature:	+5 °C to 40 °C
Storage temperature:	-10 °C to 50 °C
Relative humidity:	20% to 80% - non-condensing
Atmospheric pressure:	700 to 1060 hPa
Height above sea level:	Max. 3000 meters

Mains supply grid should be limited to the highest prospective short circuit current of 100 A.

Demands to mains supply safety for the application in accordance with IEC 60601-1, ed. 3.2, § 8.11.5

Nominal current draw:	Max. 350 mA
Power consumption (standby):	< 0.5 W
Power consumption (charging):	Max. 25 W
Approvals:	IEC 60601-1 ANSI/AAMI ES60601-1 CAN/CSA-22.2 No. 60601-1 IEC 60601-1-2 PSE

LED functionality

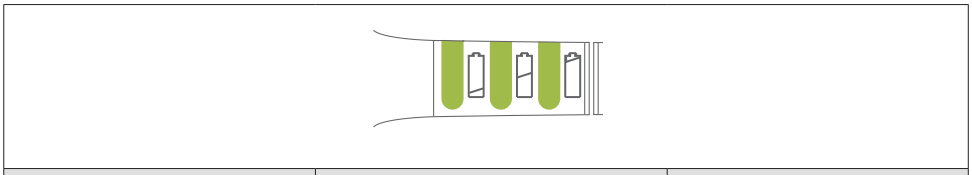

LED1 - LED2 - LED3	LED state (Not listed = off)	States while charging
	LED 1-3 constantly on	With battery or if no battery mounted on charger: 90-100%
	LED 1+2 constantly on LED 3 flashes slowly	65-90%
	LED 1 constantly on LED 2 flashes slowly	40-65%
	LED 1 flashes slowly	0-40%
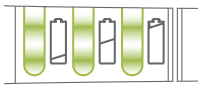	LED 1+2+3 flash slowly	Charging stopped due to low battery temperature, high battery temperature or other error conditions
	No light in LEDs	Charging stopped due to lost communication to battery



Charger mounting

When mounting CHL50 on wall, please use the two dedicated mounting holes placed in the charger body.

Front View



CHL50 must be mounted by means of 2 screws (not supplied by LINAK):

Screw type:

Diameter 4 mm/style: pan head or truss head.
Length and thread type depend on wall material.

Washer type:

Optional 4 mm washer with max. 10 mm outer diameter.

The mounting screws for the control box and the charger must be tightened with a maximum torque of 1 Nm.

When placing CHL50 on table or shelf, 4 rubber studs on the back add stability and friction to the charger/battery combination.

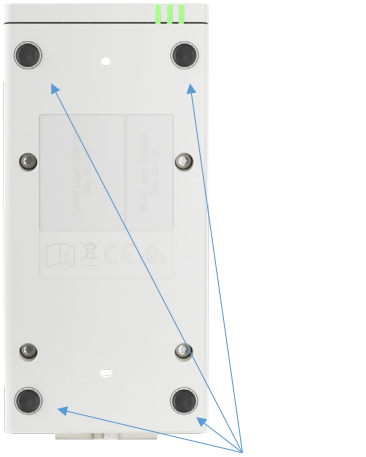

Side View

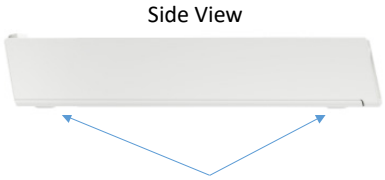

Recommendations – mounting

As long as the charger is mounted correctly, then the CHL50 complies to IPX4.

If the CHL50 is mounted incorrectly, then water will gather in the plug holes resulting in possible non-compliance with IPX4.

CHL50 can be mounted as shown on the pictures:

1) Batteries up, cable outlets downwards
2) CHL50 lying on the back, no difference if mains cable is up or down
3) IPX4 only if hanging upright



Hanging on wall - Vertical



Hanging on wall - Horizontal



Laying flat on any surface

Recommendations

- The charger CHL50 is specifically designed to charge the BAL50 type battery.
- Special care should be taken when mounting the CHL50.
- If the CHL50 is mounted correctly, the CHL50 complies to IPX4.
- If the CHL50 is mounted incorrectly, then water may enter the screw holes resulting in IPX4 non-compliance and cause malfunction and hazardous situations.
- In cleaning situations, the charger must be disconnected from mains.

Warnings

- Make a proper cable installation to avoid short-circuit of cables. Regular inspection must be made for wear and damage. Defective parts must be replaced.
- Ensure that mains cable plug is fully inserted into mains socket.

Contacts

FACTORIES

Denmark - Headquarters
LINAK A/S
Phone: +45 73 15 15 15
Fax: +45 74 45 80 48
Fax (Sales): +45 73 15 16 13
Web: www.linak.com

China
LINAK (Shenzhen) Actuator Systems, Ltd.
Phone: +86 755 8610 6656
Phone: +86 755 8610 6990
Web: www.linak.cn

Slovakia
LINAK Slovakia s.r.o.
Phone: +421 51 7563 444
Web: www.linak.sk

Thailand
LINAK APAC Ltd.
Phone: +66 33 265 400
Web: www.linak.com

USA
LINAK U.S. Inc.
Americas Headquarters
Phone: +1 502 253 5595
Fax: +1 502 253 5596
Web: www.linak-us.com
www.linak-latinamerica.com

SUBSIDIARIES

Australia
LINAK Australia Pty. Ltd
Phone: +61 3 8796 9777
Fax: +61 3 8796 9778
E-mail: sales@linak.com.au
Web: www.linak.com.au

Austria
LINAK Zweigniederlassung - Österreich (Wien)
Phone: +43 (1) 890 7446
Fax: +43 (1) 890 744615
E-mail: info@linak.de
Web: www.linak.at - www.linak.hu

Belgium
LINAK Actuator-Systems NV/SA
(Belgium & Luxembourg)
Phone: +32 (0)9 230 01 09
E-mail: beinfo@linak.be
Web: www.linak.be - www.fr.linak.be

Brazil
LINAK Do Brasil Comércio De Atuadores Ltda.
Phone: +55 (11) 2832 7070
Fax: +55 (11) 2832 7060
E-mail: info@linak.com.br
Web: www.linak.com.br

Canada
LINAK Canada Inc.
Phone: +1 502 253 5595
Fax: +1 416 255 7720
E-mail: info@linak.ca
Web: www.linak-us.com

Czech Republic
LINAK C&S s.r.o.
Phone: +42 058 174 1814
Fax: +42 058 170 2452
E-mail: info@linak.cz
Web: www.linak.cz - www.linak.sk

Denmark - International
LINAK International
Phone: +45 73 15 15 15
E-mail: info@linak.com
Web: www.linak.com

Denmark - Sales
LINAK Danmark A/S
Phone: +45 86 80 36 11
Fax: +45 86 82 90 51
E-mail: linak@linak-silkeborg.dk
Web: www.linak.dk

Finland
LINAK OY
Phone: +358 10 841 8700
E-mail: linak@linak.fi
Web: www.linak.fi

France
LINAK France E.U.R.L
Phone: +33 (0) 2 41 36 34 34
Fax: +33 (0) 2 41 36 35 00
E-mail: linak@linak.fr
Web: www.linak.fr

Germany
LINAK GmbH
Phone: +49 6043 9655 0
Fax: +49 6043 9655 60
E-mail: info@linak.de
Web: www.linak.de

India
LINAK A/S India Liaison Office
Phone: +91 120 4531797
Fax: +91 120 4786428
E-mail: info@linak.in
Web: www.linak.in

Ireland
LINAK UK Limited (Ireland)
Phone: +44 (0)121 544 2211
Fax: +44 (0)121 544 2552
+44 (0)796 855 1606 (UK Mobile)
+35 387 634 6554 (Rep.of Ireland Mobile)
E-mail: sales@linak.co.uk
Web: www.linak.co.uk

Italy
LINAK ITALIA S.r.l.
Phone: +39 02 48 46 33 66
Fax: +39 02 48 46 82 52
E-mail: info@linak.it
Web: www.linak.it

Japan
LINAK K.K.
Phone: 81-45-533-0802
Fax: 81-45-533-0803
E-mail: linak@linak.jp
Web: www.linak.jp

Malaysia
LINAK Actuators Sdn. Bhd.
Phone: +60 4 210 6500
Fax: +60 4 226 8901
E-mail: info@linak-asia.com
Web: www.linak.my

Netherlands
LINAK Actuator-Systems B.V.
Phone: +31 76 5 42 44 40 /
+31 76 200 11 10
E-mail: info@linak.nl
Web: www.linak.nl

New Zealand
LINAK New Zealand Ltd
Phone: +64 9580 2071
Fax: +64 9580 2072
E-mail: nzsales@linak.com.au
Web: www.linak.com.au

Norway
LINAK Norge AS
Phone: +47 32 82 90 90
E-mail: info@linak.no
Web: www.linak.no

Poland
LINAK Polska
LINAK Danmark A/S (Spólka Akcyjna)
Phone: +48 22 295 09 70 /
+48 22 295 09 71
E-mail: info@linak.pl
Web: www.linak.pl

Republic of Korea
LINAK Korea Ltd.
Phone: +82 2 6231 1515
Fax: +82 2 6231 1516
E-mail: info@linak.kr
Web: www.linak.kr

Slovakia
LINAK Slovakia S.R.O.
Phone: +421 51 7563 444
Web: www.linak.sk

Spain
LINAK Actuadores, S.L.u
Phone: +34 93 588 27 77
Fax: +34 93 588 27 85
E-mail: esma@linak.es
Web: www.linak.es

Sweden
LINAK Scandinavia AB
Phone: +46 8 732 20 00
Fax: +46 8 732 20 50
E-mail: info@linak.se
Web: www.linak.se

Switzerland
LINAK AG
Phone: +41 43 388 31 88
E-mail: info@linak.ch
Web: www.linak.ch - www.fr.linak.ch
www.it.linak.ch

Taiwan
LINAK (Shenzhen) Actuator systems Ltd.
Taiwan Representative office
Phone: +886 2 272 90068
Fax: +886 2 272 90096
E-mail: sales@linak.com.tw
Web: www.linak.com.tw

Turkey
LINAK İth. İhr. San. ve Tic. A.Ş.
Phone: + 90 312 4726338
Fax: + 90 312 4726635
E-mail: info@linak.com.tr
Web: www.linak.com.tr

United Kingdom
LINAK UK Limited
Phone: +44 (0)121 544 2211
Fax: +44 (0)121 544 2552
E-mail: sales@linak.co.uk
Web: www.linak.co.uk

DISTRIBUTORS

Argentina
Novotec Argentina SRL
Phone: 011-4303-8989 / 8900
Fax: 011-4032-0184
E-mail: info@novotecargentina.com
Web: www.novotecargentina.com

Colombia
MEM Ltda
Phone: +[57] (1) 334-7666
Fax: +[57] (1) 282-1684
E-mail: servicioalcliente@memltda.com.co
Web: www.mem.net.co

India
Mechatronics Control Equipments India Pvt Ltd
Phone: +91-44-28558484, 85
E-mail: bala@mechatronicscontrol.com
Web: www.mechatronicscontrol.com

Indonesia
PT. Himalaya Everest Jaya
Phone: +6 221 544 8956 /+6 221 544 8965
Fax: +6 221 619 1925
Fax (Sales): +6 221 619 4658
E-mail: hejplastic-div@centrin.net.id
Web: www.hej.co.id

Israel
NetivTech LTD
Phone: +972 55-2266-535
Fax: +972 2-9900-560
Email: info@NetivTech.com
Web: www.netivtech.com

Singapore
Servo Dynamics Pte Ltd
Phone: +65 6844 0288
Fax: +65 6844 0070
E-mail: servodynamics@servo.com.sg

South Africa
Industrial Specialised Applications CC
Phone: +27 011 466 0346
E-mail: gartht@isagroup.co.za
Web: www.isaza.co.za

United Arab Emirates
Mechatronics
Phone: +971 4 267 4311
Fax: +971 4 267 4312
E-mail: mechtron@emirates.net.ae

Terms of use

LINAK® takes great care to provide accurate and up-to-date information about its products. However, it is the responsibility of the user to determine the suitability of LINAK products for any specific application. Due to ongoing product development, LINAK products are subject to continuous modifications and changes. LINAK reserves the right to make such modifications, updates, and changes without prior notice. For this reason, LINAK cannot guarantee the accuracy or current status of printed information about its products.

LINAK uses its best efforts to fulfil orders. However, for the reasons mentioned above, LINAK cannot guarantee availability of any particular product at any given time. LINAK reserves the right to discontinue the sale of any product displayed on its website or listed in its catalogues or in other written material created and produced by LINAK, LINAK subsidiaries, or LINAK affiliates.
All sales are subject to the applicable terms and conditions of sale and delivery available on LINAK websites.
LINAK and the LINAK logotype are registered trademarks of LINAK A/S. All rights reserved.

Copyright© LINAK • 2026-10• LIT-63-02-007 X

LINAK®
WE IMPROVE YOUR LIFE